BODY

CONTENTS

HOOD 3

FENDER 5

FUEL FILLER DOOR 6

WINDOW GLASS 8

- ADHESIVES 8
- SPECIAL TOOL 8
- WINDOW REPAIR 8
- WINDSHIELD 10
- QUARTER WINDOW GLASS 14
- BACK DOOR GLASS 16

DOORS 18

- SERVICE SPECIFICATIONS 18
- SEALANT 18
- SPECIAL TOOLS 18
- TROUBLESHOOTING 19
- ON-VEHICLE SERVICE 19
  - Door Fit Adjustment 19
  - Door Window Glass Adjustment 19
  - Defective Power Window Adjustment and Replacement 20
  - Power Window Safety Mechanism Check .. 20
  - Door Outside Handle Play Check 21
  - Power Window Operation Current Check 21
  - Circuit Breaker (Incorporated in the Power Window Motor) Check 21
  - Door Inside Handle Play Check and Adjustment 21
- DOOR ASSEMBLY 22
- DOOR TRIM AND WATERPROOF FILM 24
- DOOR GLASS AND REGULATOR 30
- DOOR HANDLE AND LATCH 33
- WINDOW GLASS RUNCHANNEL AND DOOR OPENING WEATHERSTRIP 36

BACK DOOR 39

- SERVICE SPECIFICATION 39
- SEALANT 39
- SPECIAL TOOL 39
- TROUBLESHOOTING 39

CONTINUED ON NEXT PAGE

ON-VEHICLE SERVICE **40**
Back Door Fit Adjustment 40
Back Door Handle Play Check 40

BACK DOOR ASSEMBLY **41**

BACK DOOR TRIM AND WATERPROOF FILM **43**

BACK DOOR HANDLE AND LATCH **44**

KEYLESS ENTRY SYSTEM **45**

TROUBLESHOOTING **45**

ON-VEHICLE SERVICE **45**
How to Replace a Battery of the Transmitter 45
Encrypted Code Registration Method .. 45

KEYLESS ENTRY SYSTEM **46**

SUNROOF **47**

SERVICE SPECIFICATION **47**

TROUBLESHOOTING **47**

ON-VEHICLE SERVICE **47**
Water Test 47
Sunroof Fit Adjustment 47

SUNROOF **48**

HOOD

REMOVAL AND INSTALLATION

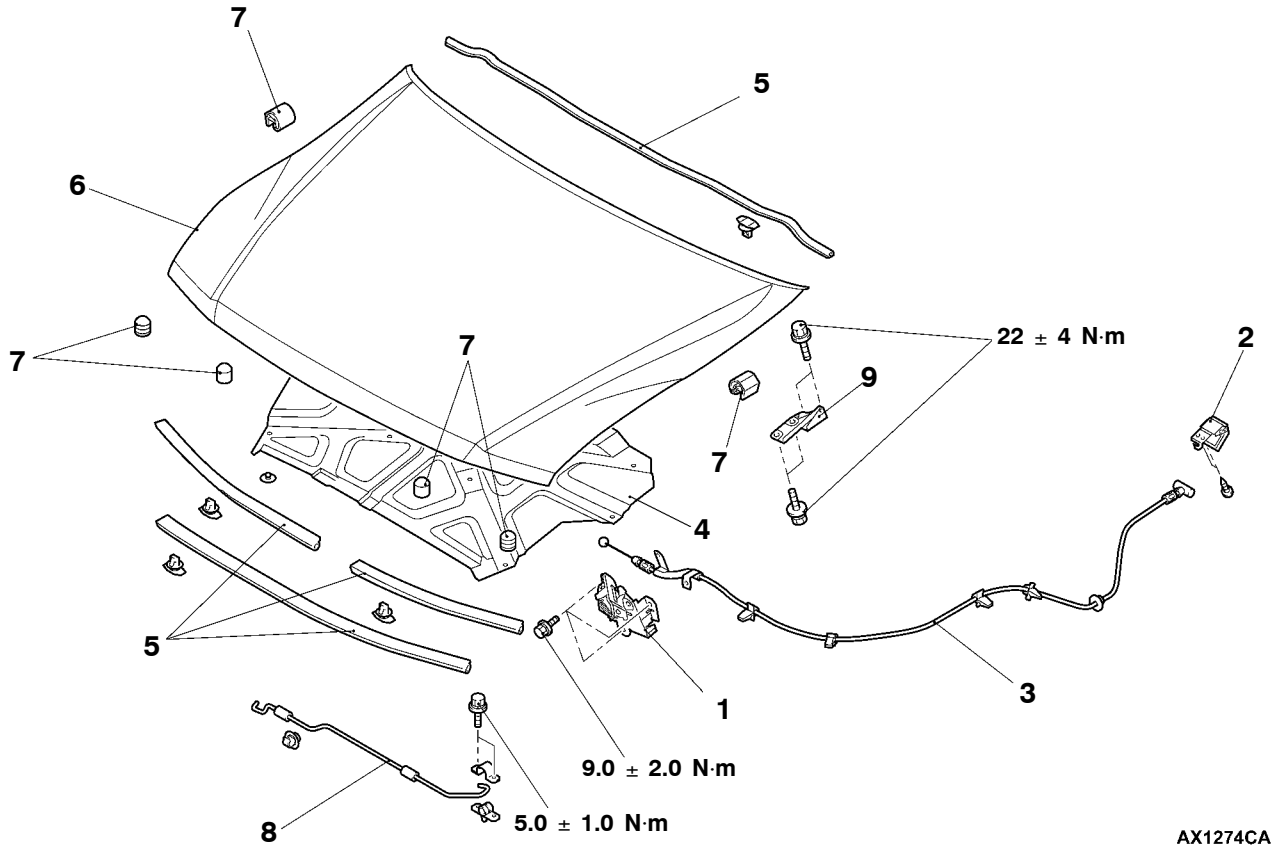

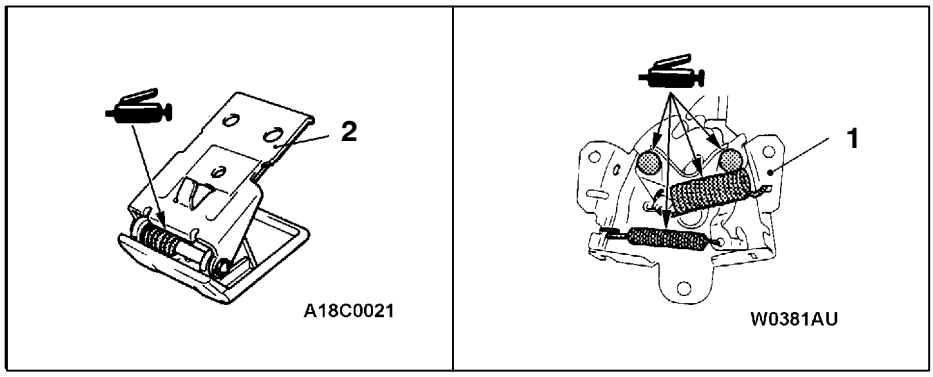

Hood latch removal steps

- Front grille (Refer to GROUP 51.)

1. Hood latch

Hood lock release cable removal steps

2. Hood lock release handle
3. Hood lock release cable

Hood removal steps

4. Hood silencer
5. Hood weatherstrip
   - Washer hose (Refer to GROUP 51.)
6. Hood
7. Hood bumper
8. Hood support rod (Refer to GROUP 51.)
9. Hood support rod (Refer to GROUP 51.)

Adjustment of clearance around hood

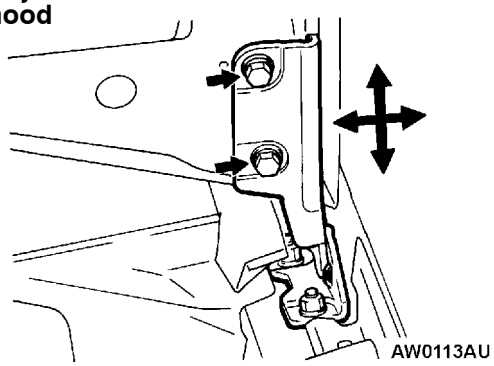

Adjustment of hood height

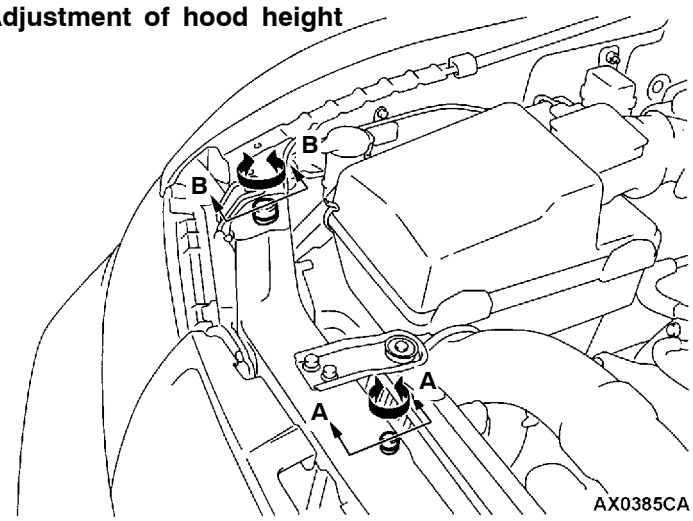

Adjustment of hood step and hood striker linkage

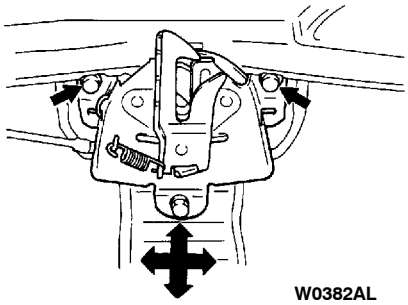

Section A - A

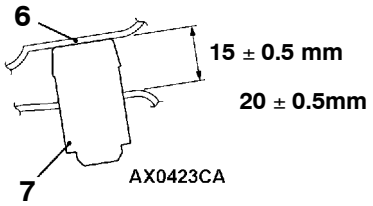

Section B - B

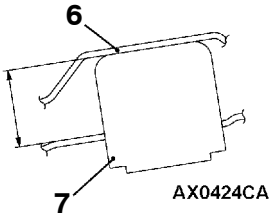

Clip positions

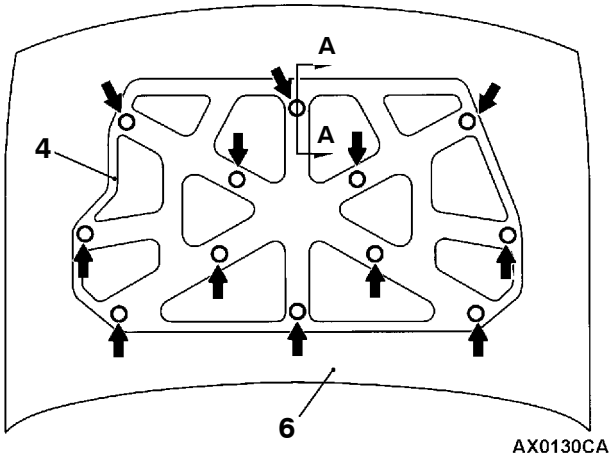

Section A - A

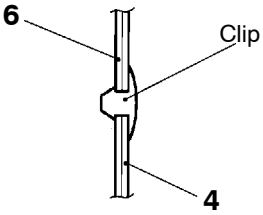

: Clip positions

FENDER

REMOVAL AND INSTALLATION

Caution: SRS
Do not strike the front impact sensor when removing or installing the fender.

Pre-removal and Post-installation Operation
- Front Bumper Removal and Installation (Refer to GROUP 51.)
- Front Mud Guard Removal and Installation (Refer to GROUP 51.)
- Overfender Removal and Installation (Refer to GROUP 51.)

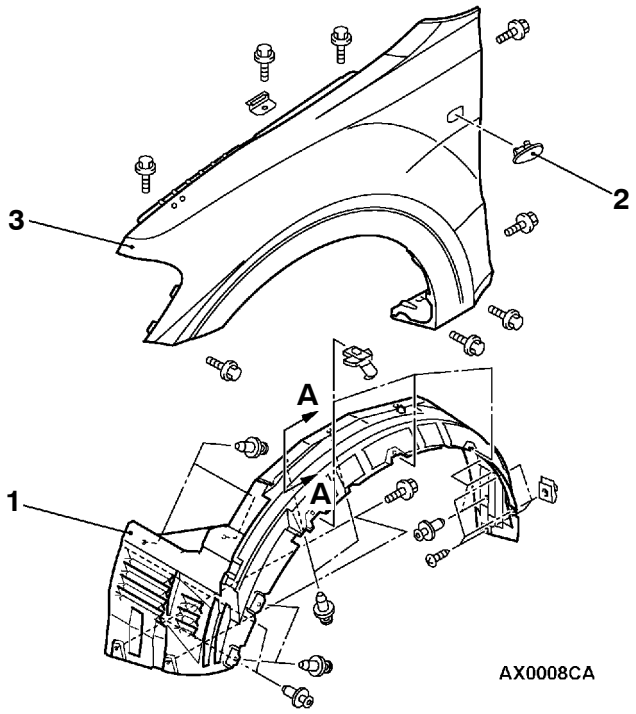

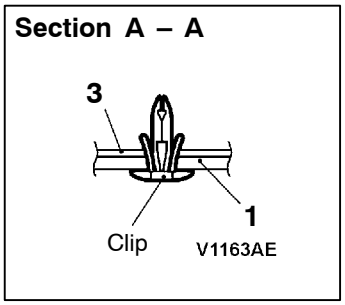

Removal steps
1. Splash shield
◀A▶ ▶A◀ 2. Side turn signal lamp
3. Fender

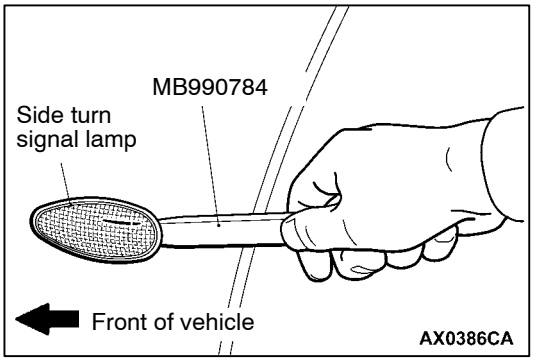

REMOVAL SERVICE POINT

◀A▶ SIDE TURN SIGNAL LAMP REMOVAL

Use the special tool to unhook the fender, and then remove the side turn-signal lamp.

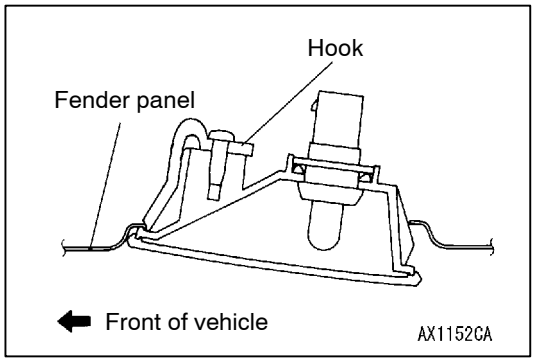

INSTALLATION SERVICE POINT

▶A◀ SIDE TURN SIGNAL LAMP INSTALLATION

Engage the hook into the fender panel, and then install the side turn signal lamp.

FUEL FILLER DOOR

REMOVAL AND INSTALLATION

Pre-removal and Post-installation Operations
- Quarter Trim, Lower (R.H.) Removal and Installation (Refer to GROUP 52A.)
- Center Pillar Trim, Lower (Long Wheelbase - R.H.) Removal and Installation (Refer to GROUP 52A.)

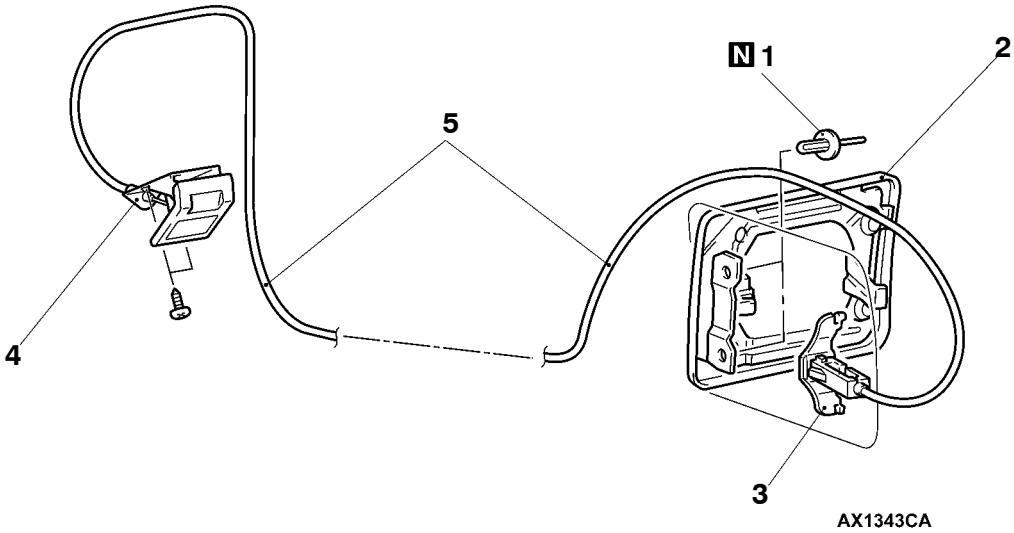

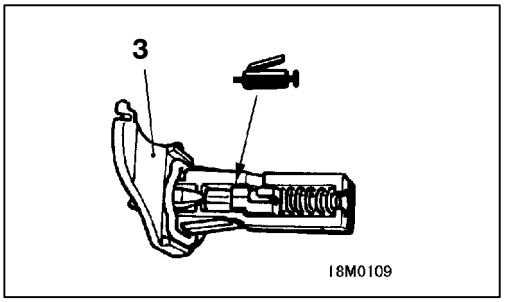

Removal steps

◀A▶ ▶A◀ 1. Rivet
2. Fuel filler door panel assembly
3. Fuel filler door lock hook assembly
4. Lid lock release handle
- Heater deck cross assembly (Refer to GROUP 55.)
- AC inverter (Long wheelbase) (Refer to GROUP 54.)

5. Fuel filler door lock release cable

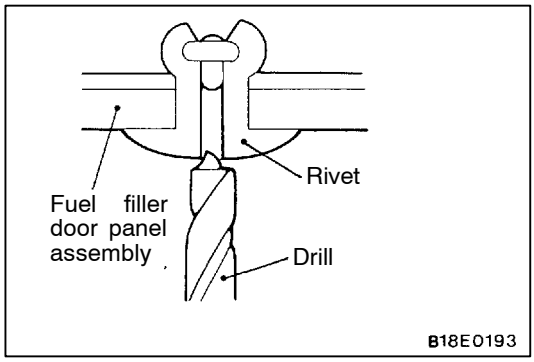

REMOVAL SERVICE POINT

◀A▶ RIVET REMOVAL

Use a drill (Ø6.5 - 7.5 mm) to break the rivet by drilling a hole, and then remove the rivet.

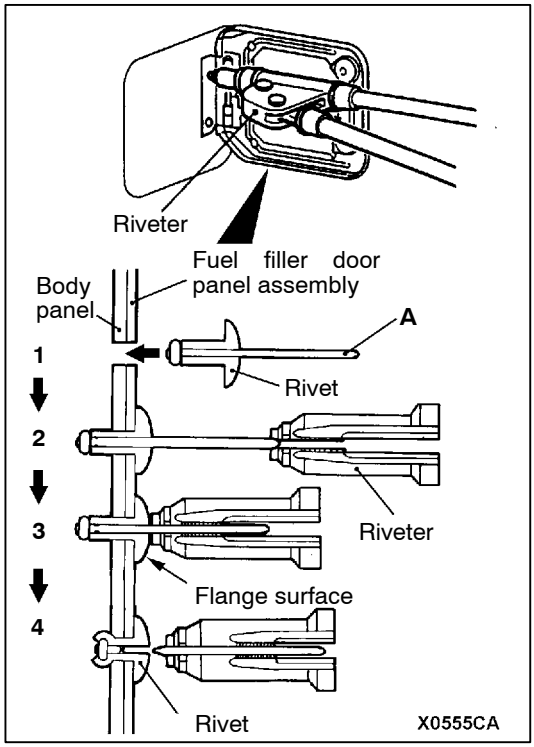

INSTALLATION SERVICE POINT

▶A◀ RIVET INSTALLATION

Use a riveter shown to install rivets as follows:

1. Insert a rivet in the body panel and fuel filler door panel assembly.
2. Insert the riveter to the rod (A shown) of a rivet.
3. Pressing the flange surface of the rivet with the riveter, handle the riveter.
4. The rod is cut at its thinnest point and the rivet is held in position.

WINDOW GLASS

ADHESIVE

Items	Specified adhesive
Windshield	3M ATD Part No. 8609 Super Fast Urethane Auto Glass Sealant or equivalent
Quarter window glass	
Back door glass	
Quarter window garnish	3M ATD Part No. 8513 Grommeted Windshield Sealant or equivalent

SPECIAL TOOL

Tool	Number	Name	Use
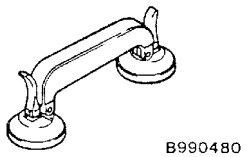	MB990480	Window glass holder	Removal and installation of windshield

WINDOW REPAIR

The following glass parts are installed with a liquid urethane adhesive method:

- Windshield
- Quarter window glass
- Back door window glass

ITEMS NEEDED

Name	Remarks
Adhesive	3M ATD Part No. 8609 Super Fast Urethane Auto Glass Sealant or equivalent
Primer	3M ATD Part No. 8608 Super Fast Urethane Primer or equivalent
Spacers	Available as service part
Dam	Available as service part
Anti-rust solvent (or Tectyl 506T...Valvoline Oil Company)	For rust prevention
Isopropyl alcohol	For grease removal from bonded surface
Steel piano wire	Dia. × length...0.6mm × 1m For cutting adhesive
Adhesive gun	For pressing-out adhesive

HANDLING OF AUTO WINDOW SEALER

Keep the sealant in a cool place, not exposed to the direct rays of the sun. Do not place any heavy article on the sealant nor press it, otherwise it will become deformed. Avoid storing the sealant for more than 6 months, because it will lose its sealing effect.

BODY PINCH-WELD FLANGE SERVICING

Before servicing the body pinch-weld flange, remove old adhesive completely. If the flange requires painting, bake it after painting is completed.

WORKING PROCESS

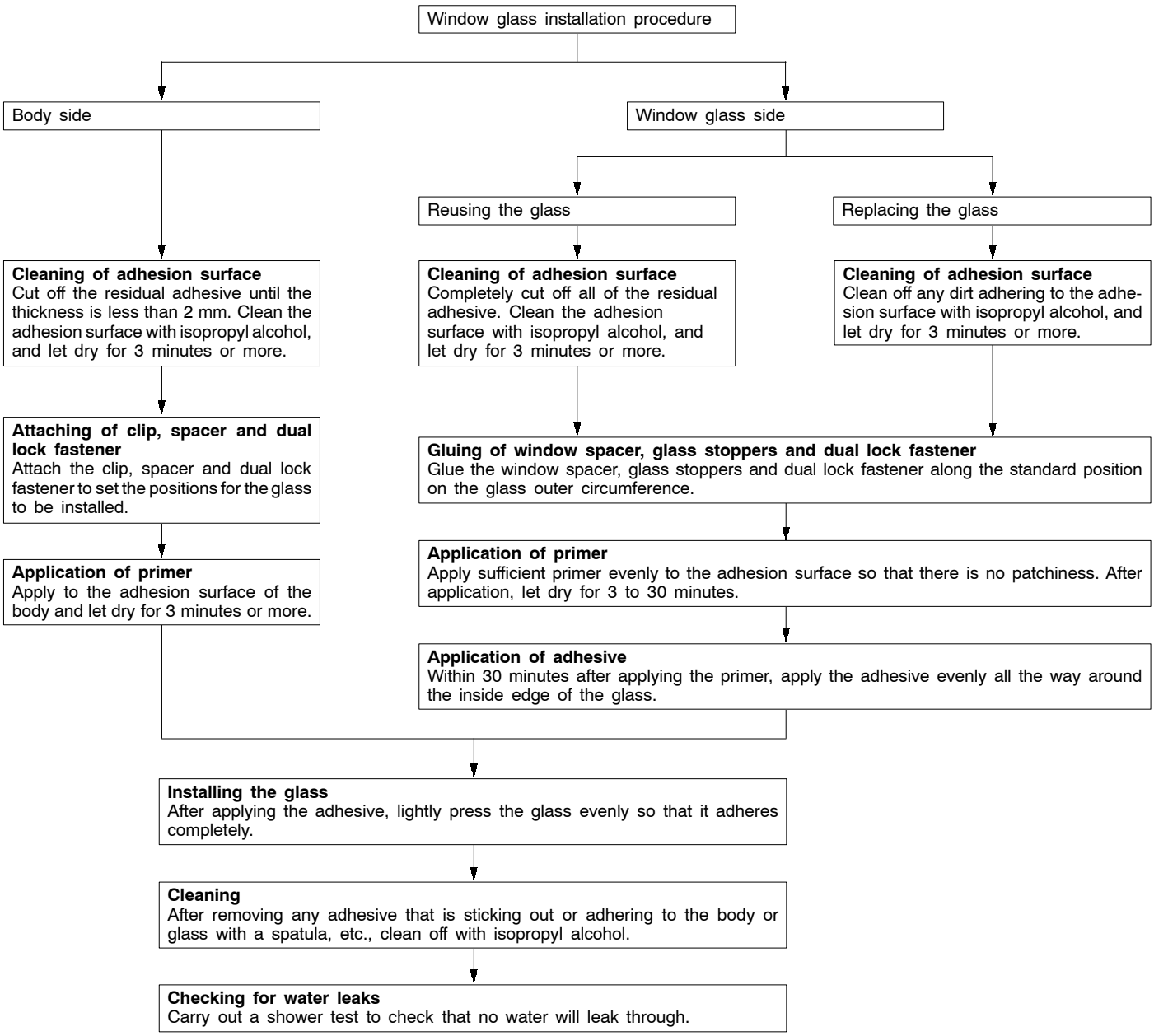

WINDSHIELD

REMOVAL AND INSTALLATION

Pre-removal and Post-installation Operations
- Deck Garnish Removal and Installation (Refer to GROUP 51A.)
- Headlining Removal and Installation
- Front Pillar Trim Removal and Installation (Refer to GROUP 52A – Trim.)

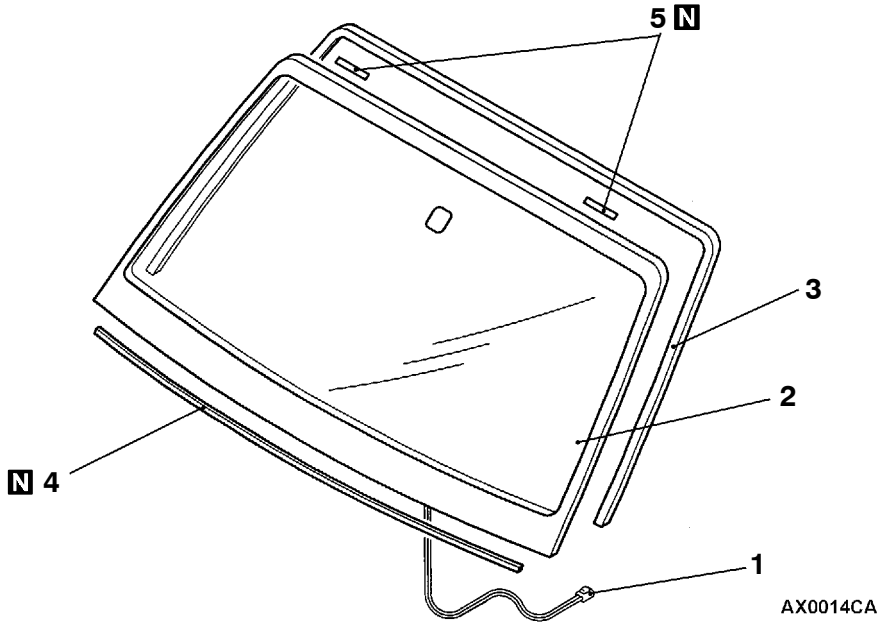

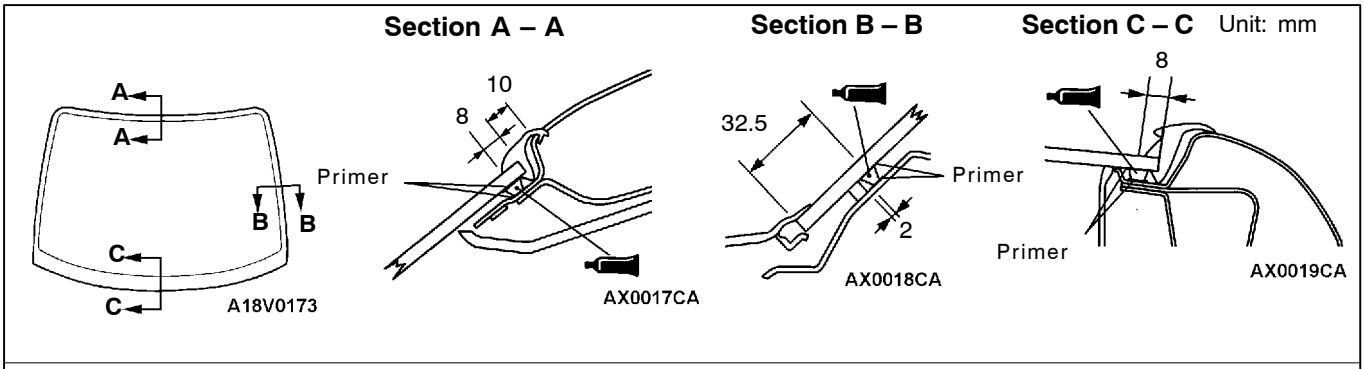

Adhesive: 3M ATD Part No. 8609 Super Fast Urethane Auto Glass Sealant or equivalent

Removal steps

1. Wiper deicer connector (Refer to GROUP 51.)

◀A▶ ▶A◀ 2. Windshield

▶A◀ 3. Windshield moulding

▶A◀ 4. Windshield spacer

▶A◀ 5. Glass stopper

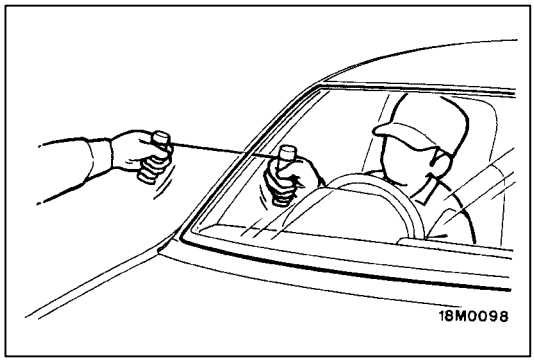

REMOVAL SERVICE POINT

◀A▶ WINDSHIELD REMOVAL

1. In order to protect the body (paint surface), apply cloth tape to all body areas around the installed windshield.
2. Using a sharp-point drill, make hole in the windshield adhesive.
3. Pass the piano wire from the inside of the vehicle through the hole.
4. Pull the piano wire alternately from the inside and outside along the windshield to cut the adhesive.

   Caution
   Do not let the piano wire touch the edge of the windshield.
5. Make alignment marks on the windshield and body.
6. Use the special tool to remove the windshield.

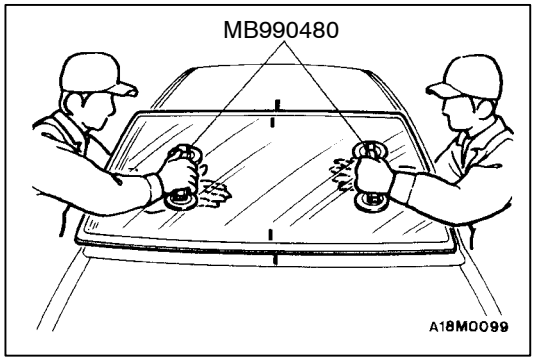

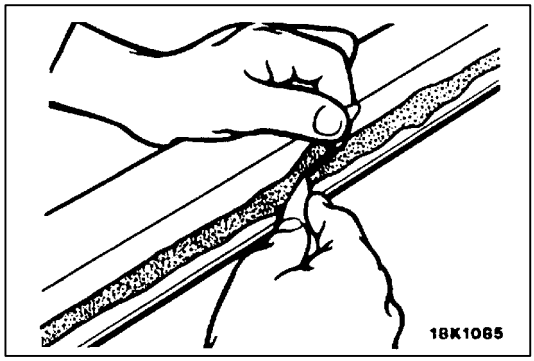

7. Use a knife to cut away remaining adhesive to 2 mm thick or less around the entire circumference of the body flange.
8. Smooth the flange surface.

   Caution
   (1) Use care not to remove more adhesive than necessary, or the adhesive could weaken.
   (2) Be careful also not to damage the paintwork on the body surface with the knife. If the paintwork is damaged, repair the damaged area with repair paint or anti-rust agent.
9. When reusing windshield, remove the remaining adhesive on the windshield completely. Then, decrease the windshield with isopropyl alcohol.
10. Decrease the body flange in the same way.

    Caution
    Before the next job, leave the decreased parts for 3 minutes or more to dry. Also, do not touch any cleaned surface.

INSTALLATION SERVICE POINT

▶A◀GLASS STOPPER/WINDSHIELD MOULDING/WINDSHIELD SPACER/WINDSHIELD INSTALLATION

1. When replacing the windshield, first align it with the body, and then matchmark them.
2. Use isopropyl alcohol to clean the inside edge of the windshield and the body flange.
3. Use a primer dampened sponge to apply the clear gasoline to the specified area around the windshield and the body evenly.
4. After the application, let it dry for at least three minutes.
5. Position the glass stopper and the windshield spacer as shown, ensuring that there are no bends or warpages inside the windshield.

Glass stopper and spacer installation position

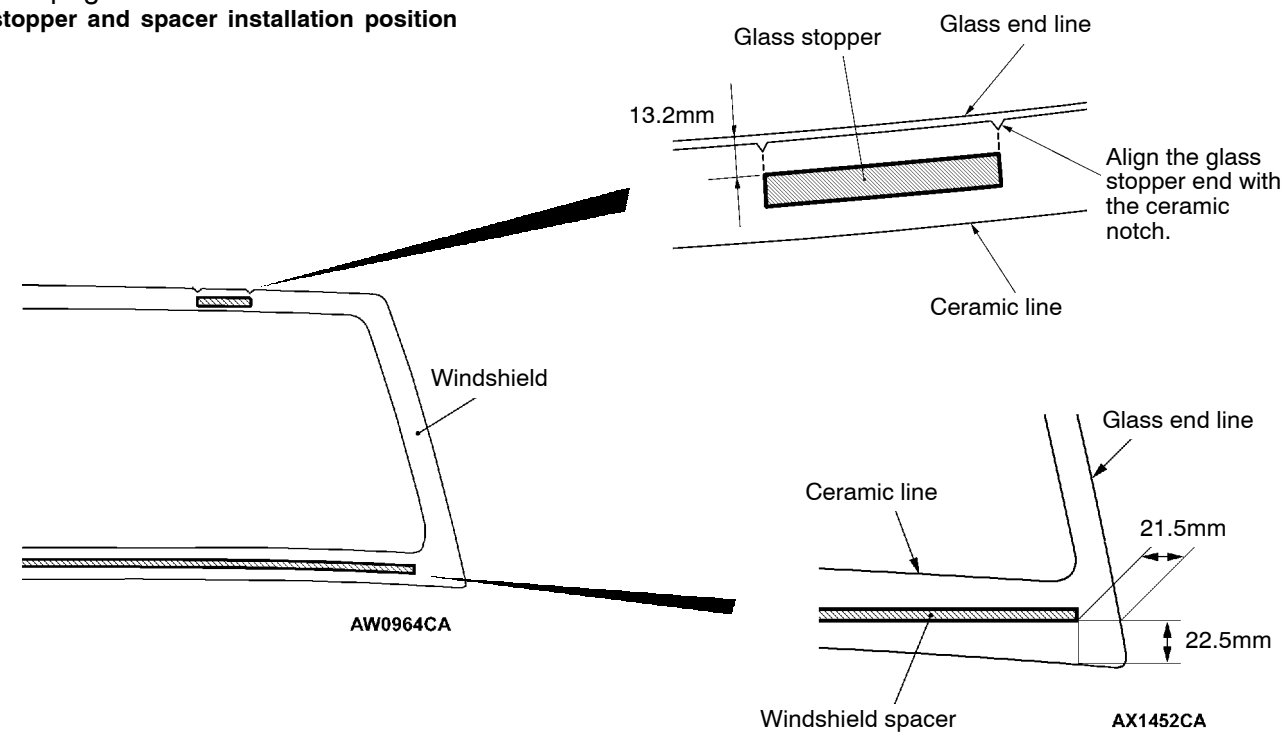

Caution

(1) The primer strengthens the adhesive, so be sure to apply it evenly around the entire circumference. However, a too thick application will weaken the adhesive.

(2) Never touch the primer-applied surface.

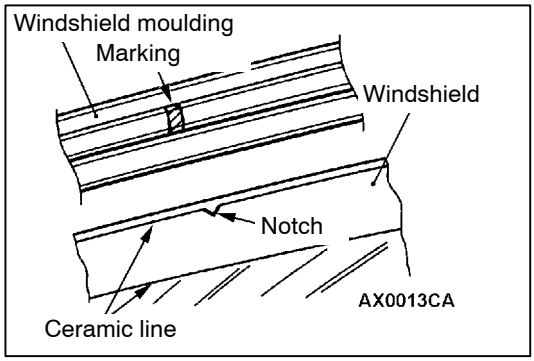

6. Align the marking on the windshield moulding with the windshield notch, and then install the windshield moulding.

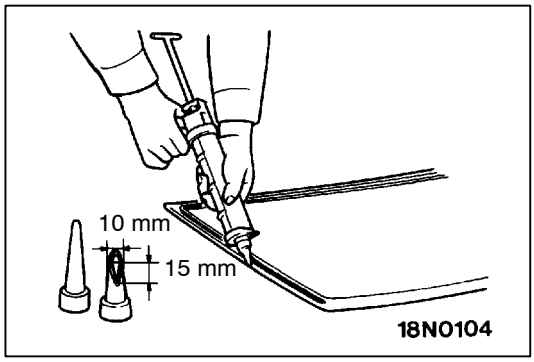

7. Within thirty minutes after the primer application, fill a sealant gun with adhesive, and then apply the adhesive evenly around the windshield.

   NOTE
   Cut the tip of the sealant gun nozzle into a V shape to simplify adhesive application.
8. Align the mating marks on the windshield and the body, and lightly press the windshield evenly so that it adheres completely.
9. Use a spatula or the like to remove any excessive adhesive. Install the windshield moulding before the adhesive sets. After the windshield is installed, wait until the adhesive sets.(Refer to P.42-9.)
10. Wait thirty minutes or more, and then test for water leakage.

    Caution
    (1) Do not move the vehicle unless absolutely necessary.
    (2) When testing for water leakage, do not pinch the end of the hose to spray the water.

QUARTER WINDOW GLASS

REMOVAL AND INSTALLATION

Pre-removal and Post-installation Operation
Quarter Trim, Upper Removal and Installation
(Refer to GROUP 52A.)

<Short wheelbase>

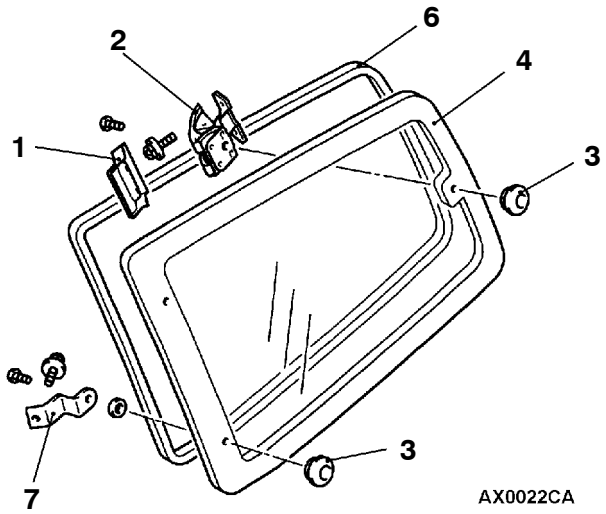

<Long wheelbase>

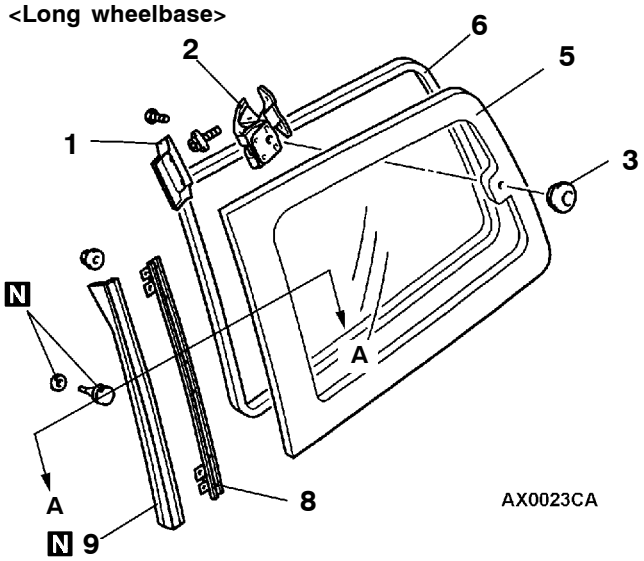

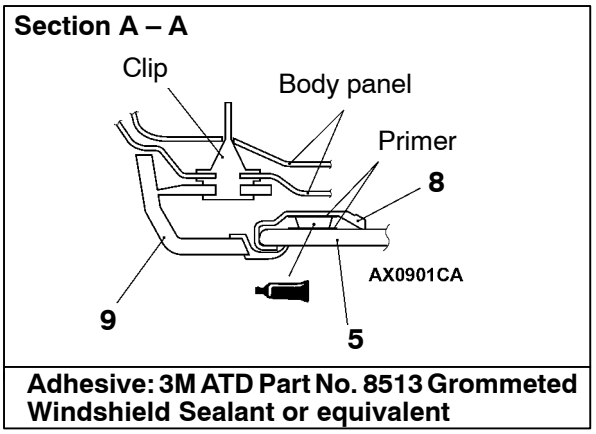

Removal steps

1. Lever
2. Quarter window link
3. Rubber and nut
4. Quarter window glass
5. Quarter window glass ◀A▶
6. Quarter window weatherstrip
7. Quarter window hinge
8. Quarter window moulding ◀A▶ ▶A◀
9. Quarter window garnish

REMOVAL SERVICE POINT

◀A▶ QUARTER WINDOW GLASS/QUARTER WINDOW MOULDING REMOVAL

Remove by the same procedure as for the windshield. (Refer to P.42-11.)

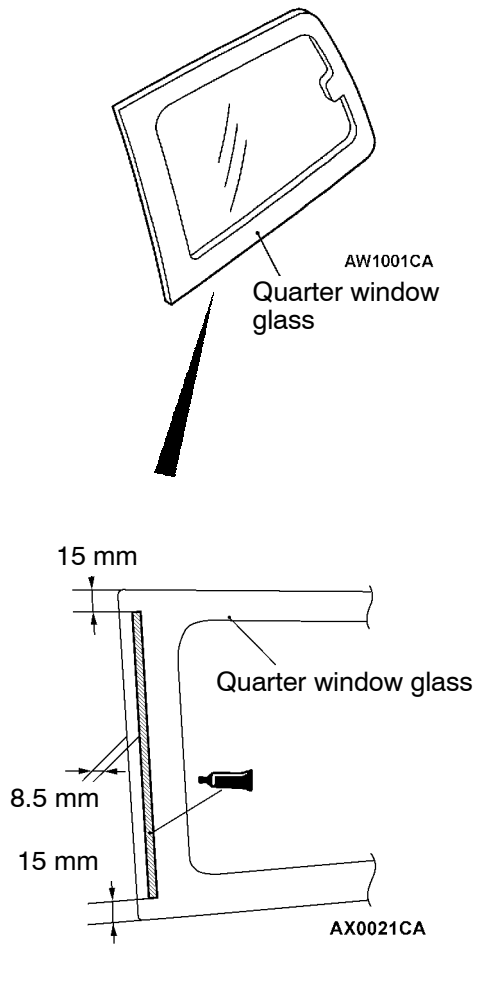

Adhesive: 3M ATD Part No. 8513 Grommeted Windshield Sealant or equivalent

INSTALLATION SERVICE POINT

▶A◀ QUARTER WINDOW MOULDING INSTALLATION

1. Wipe away all adhesive which is adhering to the channel in the quarter window moulding and to the quarter window glass, and then clean the surfaces with unleaded petrol.

   Caution
   The areas which have been cleaned of adhesive should be allowed to stand for three minutes or more until they are completely dry before continuing to the next step. Furthermore, do not touch the surfaces after they have been cleaned.
2. Apply an even coating of primer to the adhesion surface of the quarter window glass, while being careful not to miss any places.
3. Apply the specified sealant to the quarter window glass in the locations specified, and then install the quarter window moulding to the quarter window glass.

   Adhesive:
   3M ATD part No.8513 Grommeted Sealant or equivalent

BACK DOOR GLASS

REMOVAL AND INSTALLATION

Pre-removal and Post-installation Operations
- Back Door Upper Trim Removal and Installation (Refer to P.42-43.)
- Spare Tire Removal and Installation

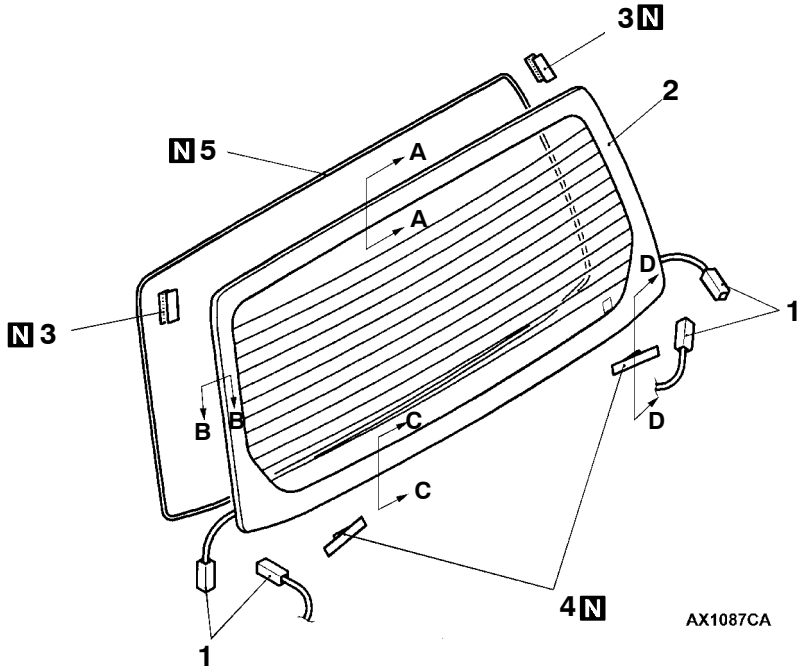

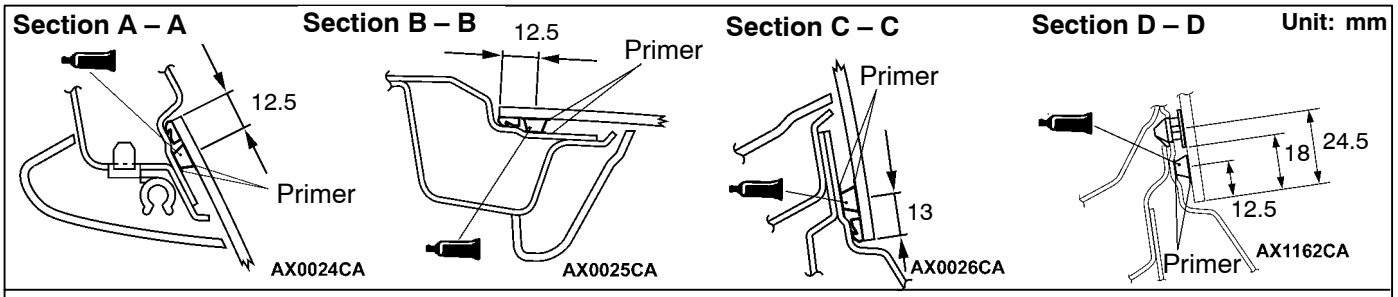

Adhesive: 3M ATD Part No. 8609 Super Fast Urethane Auto Glass Sealant or equivalent

Removal steps

1. Harness connector
◀A▶ ▶A◀ 2. Back door glass
▶A◀ 3. Dual lock fastener
▶A◀ 4. Glass stopper
▶A◀ 5. Window dam

REMOVAL SERVICE POINT

◀A▶ BACK DOOR GLASS REMOVAL

Remove the back door glass in the same manner as for the windshield. (Refer to P42-11.)

INSTALLATION SERVICE POINT

▶A◀WINDOW DAM/GLASS STOPPER/DUAL LOCK FASTENER/BACK DOOR GLASS INSTALLATION

1. Clean both the glass side and vehicle body side of the window dam, dual lock fastener and glass stopper mounting surfaces with unleaded petrol.
2. Install the window dam.

Window dam installation position

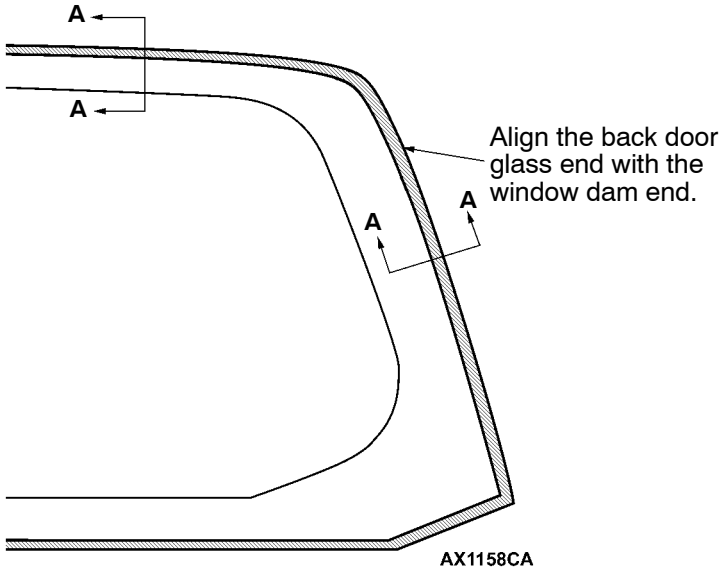

Section A – A

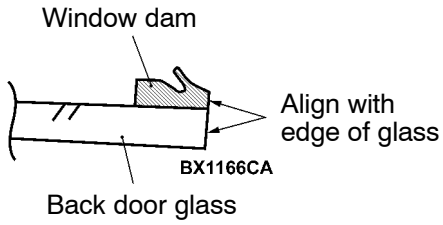

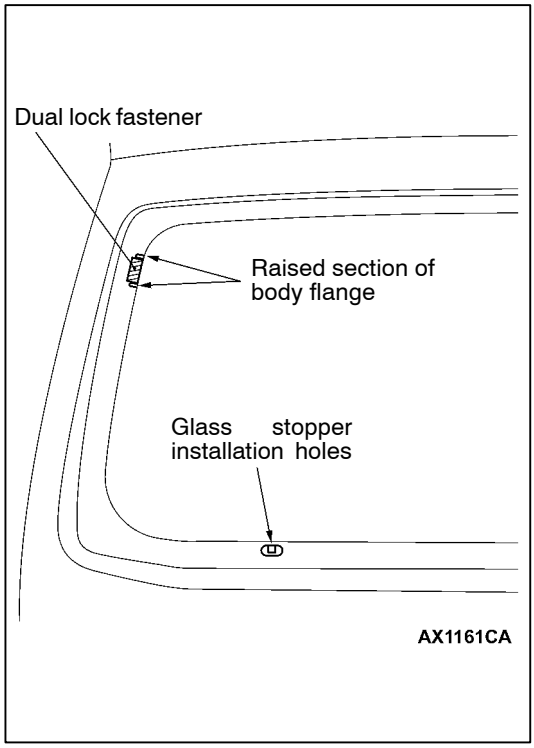

3. Attach the dual lock fastener to the body flange in the correct position.
4. Attach the dual lock fastener and glass stopper to the back door window glass in the positions which correspond to the dual lock fastener and glass stopper mounting sections of the body flange.
5. Apply the primer and adhesive.
6. Install the glass by the same procedure as for the windshield. (Refer to P.42-12.)

DOORS

SERVICE SPECIFICATIONS

Items	Standard value
Door outside handle play mm	2.0 or more
Power window operating current A	5.0 ± 2 (power supply 14.5 ± 0.3 V at 23°C)
Door inside handle play mm	5.3 or more

SEALANT

Items	Specified sealant	Remark
Waterproof film	3M ATD Part No. 8625 or equivalent	Ribbon sealer

SPECIAL TOOLS

Tool	Number	Name	Use
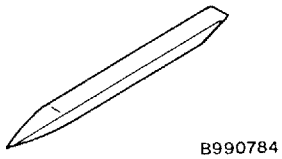 B990784	MB990784	Ornament remover	Door trim removal
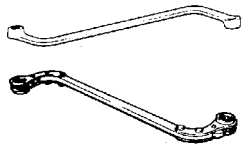 00003936	MB990900 or MB991164	Door hinge adjusting wrench	Adjustment of door fit
A 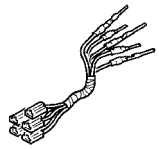 B 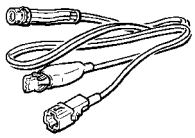 C D C991223	MB991223 A: MB991219 B: MB991220 C: MB991221 D: MB991222	Harness set A: Test harness B: LED harness C: LED harness adapter D: Probe	Terminal voltage measurement A: Connector pin contact pressure check B: Power circuit check C: Power circuit check D: Commercial tester connection

TROUBLESHOOTING

DIAGNOSIS FUNCTION

The power window and central door locking is controlled by the Smart Wiring System (SWS). For troubleshooting, refer to GROUP 54B - Troubleshooting.

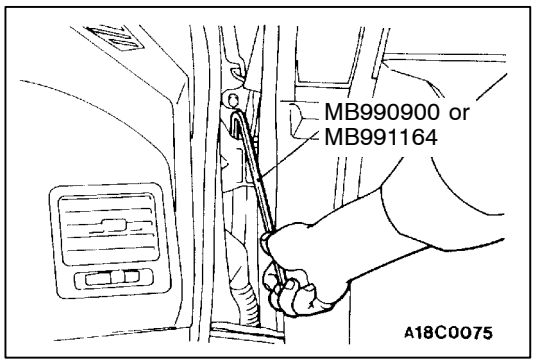

ON-VEHICLE SERVICE

DOOR FIT ADJUSTMENT

1. If clearance between the door and body is uneven, affix protective tape to the fender around the hinge and to the edge of the door. Then use the special tool to loosen the door hinge mounting bolts on the body, and adjust the clearance around the door so that it becomes even.
2. If the door and body are not flush with each other, use the special tool to loosen the door hinge mounting bolts on the door. Then align the door.

   Caution
   Do not load more than 98 N·m on the special tool.

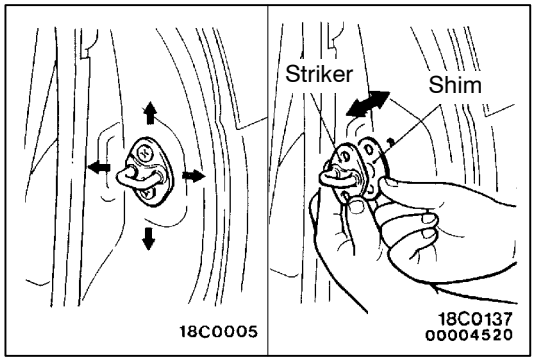

3. If the door opening and closing is heavy, adjust the meshing of the striker and the door latch (forward and backward) by adding shims to the striker and by moving the striker up and down or to the left and right.

DOOR WINDOW GLASS ADJUSTMENT

Check that the door glass operates smoothly and moves along the door glass runchannel when the door window glass is fully raised and fully lowered. If there is a problem, adjust by the following procedure.

1. Remove the door trim and waterproof film. (Refer to P.42-24.)

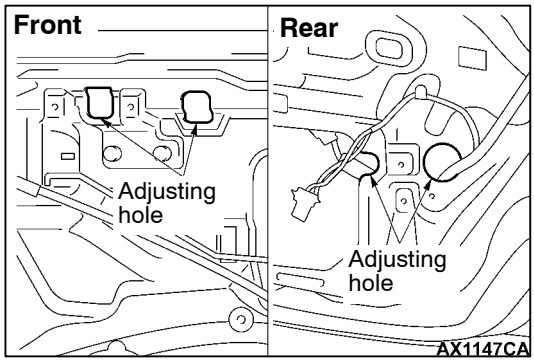

2. With the door window glass fully closed, loosen the door glass mounting screws through the adjusting holes, and then lower the door window glass slightly.
3. Fully close the door window glass again, and then fully tighten the door glass mounting screws through the adjusting holes.

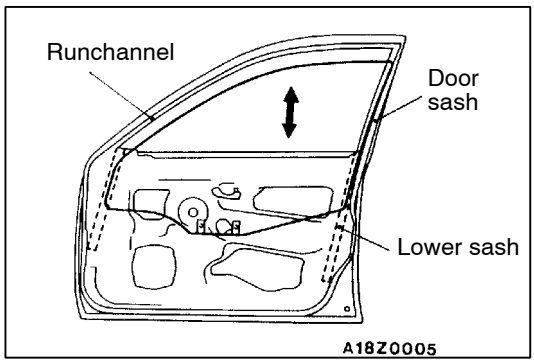

DEFECTIVE POWER WINDOW ADJUSTMENT AND REPLACEMENT

If the window glass wrongly, automatically lowers while being raised, adjust or replace as follows:

1. Remove the door trim and the waterproof film. (Refer to P.42-24.)
2. Remove the window regulator assembly from the door window glass, and then raise and lower the door window glass by hand to check the operation force.

   NOTE
   Insert soft stuff like cushion to prevent damage to the glass if it falls down.
3. If the door window glass does not move up and down smoothly, do as follows:
   - Check the installation condition of the runchannel.
   - Straighten twist in the door sash.
   - Check the installation condition of the lower sash or the center sash.

   NOTE
   The lower sash cannot normally be adjusted, but it may be possible to adjust the sash span slightly within the range allowed by manufacturing tolerances by pushing the lower sash outwards while re-installing it.
4. If repair or adjustment is impossible, replace the door assembly.

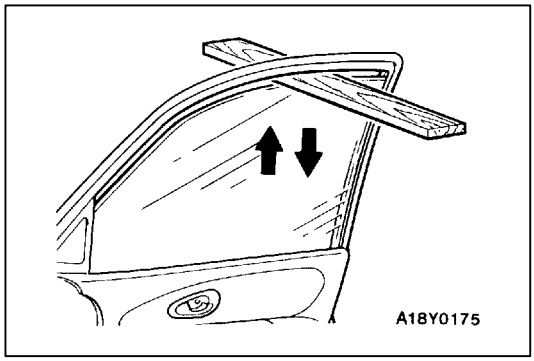

POWER WINDOW SAFETY MECHANISM CHECK

1. Place a wooden board about 10 mm thick as shown. Then, raise the window glass.
2. Check that the window lowers by about 150 mm when the window clamps the board. If this doesn't happen, do troubleshooting. (Refer to P.42-19.)

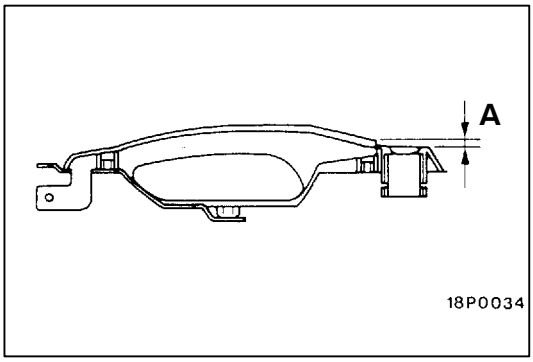

DOOR OUTSIDE HANDLE PLAY CHECK

1. Check that the door outer handle play is at the standard value.

   Standard value (A):
   Front 2.0 mm or less
   Rear 1.7 mm or less

2. Check the door outside handle and door latch assembly, and replace the assembly if there is a malfunction.

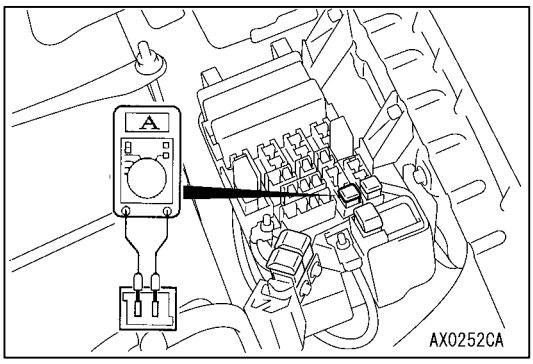

POWER WINDOW OPERATION CURRENT CHECK

1. Remove the power window fuse, and connect a multimeter as shown in the illustration.
2. When the power window switch is pressed to the UP side, a large amount of operating current flows when the window starts and stops moving, so measure the current during the period between these two extremes.

   Standard value:
   5.0 ± 2 A (Power supply voltage 14.5 ± 0.3 V, at 23°C)

3. If the current is outside the standard value, refer to Troubleshooting (Refer to P.42-19.)

CIRCUIT BREAKER (INCORPORATED IN THE POWER WINDOW MOTOR) CHECK

1. Turn the power window switch to UP to close the window glass. Keep the switch at the fully-closed position for another 10 seconds.
2. Release the power window switch and immediately turn it to DOWN. Under this condition if the window glass starts to lower within 60 seconds, the circuit breaker can be judged good.

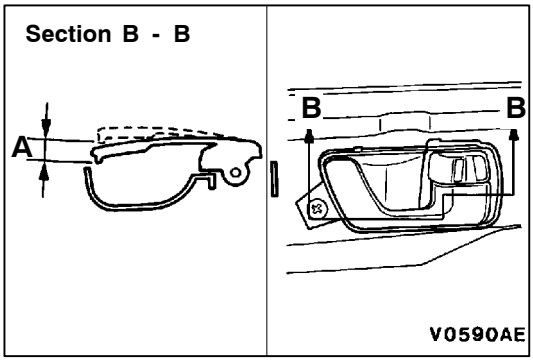

DOOR INSIDE HANDLE PLAY CHECK AND ADJUSTMENT

1. Check that the door inside handle play is at the standard value.

   Standard value (A): 5.3 mm or less

2. If the play is outside the standard value, remove the door trim. (Refer to P.42-24.)
3. Adjust the door inside handle play by using the clip which connects the door inside handle and the rod.

DOOR ASSEMBLY

REMOVAL AND INSTALLATION

Post-installation Operation
Door Fit Adjustment (Refer to P.42-19.)

FRONT DOOR

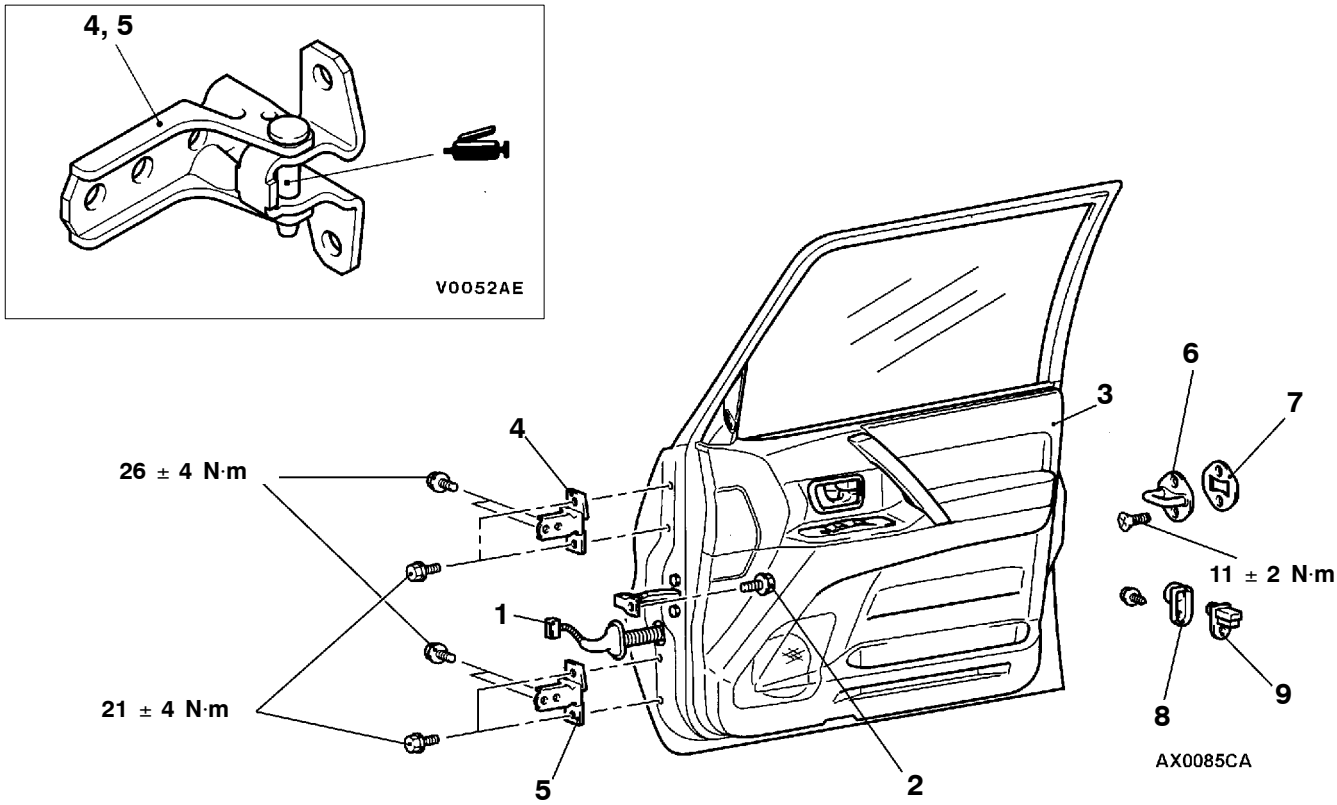

Door assembly removal steps

1. Harness connector
2. Door check connecting bolt
3. Door assembly
4. Door upper hinge
5. Door lower hinge

Striker removal steps

6. Striker
7. Striker shim

Door switch removal steps

8. Door switch cap
9. Door switch

REAR DOOR

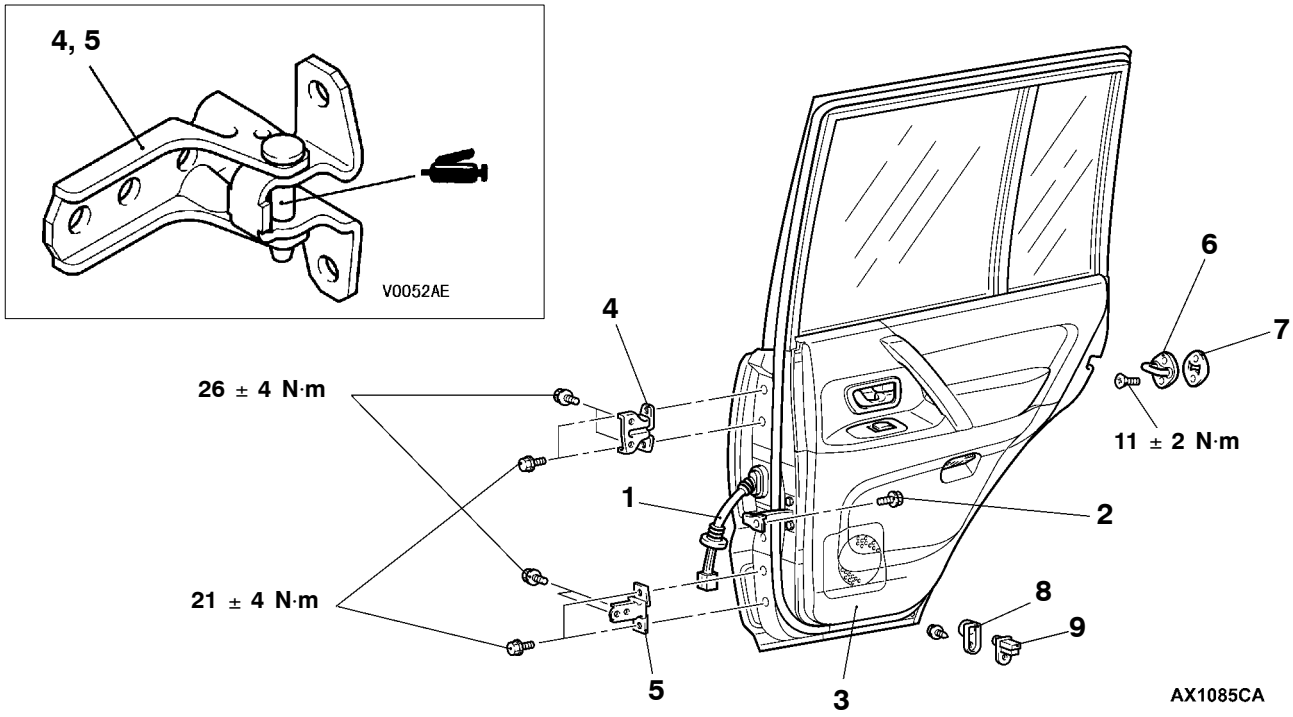

Door assembly removal steps

1. Harness connector
2. Door check connecting bolt
3. Door assembly
4. Door upper hinge
5. Door lower hinge

Striker removal steps

6. Striker
7. Striker shim

Door switch removal steps

8. Door switch cap
9. Door switch

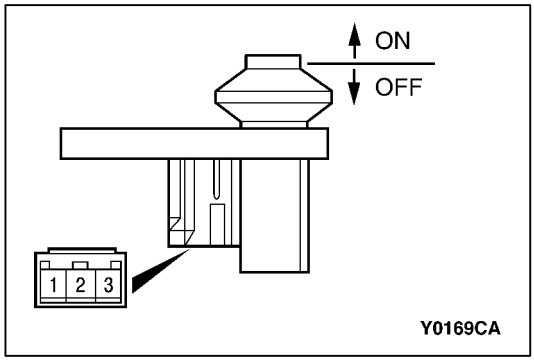

INSPECTION

DOOR SWITCH CONTINUITY CHECK

Switch position	Terminal number		
	1	2	3
Released (ON)	○	○	○
Depressed (OFF)			

DOOR TRIM AND WATERPROOF FILM

REMOVAL AND INSTALLATION

FRONT DOOR

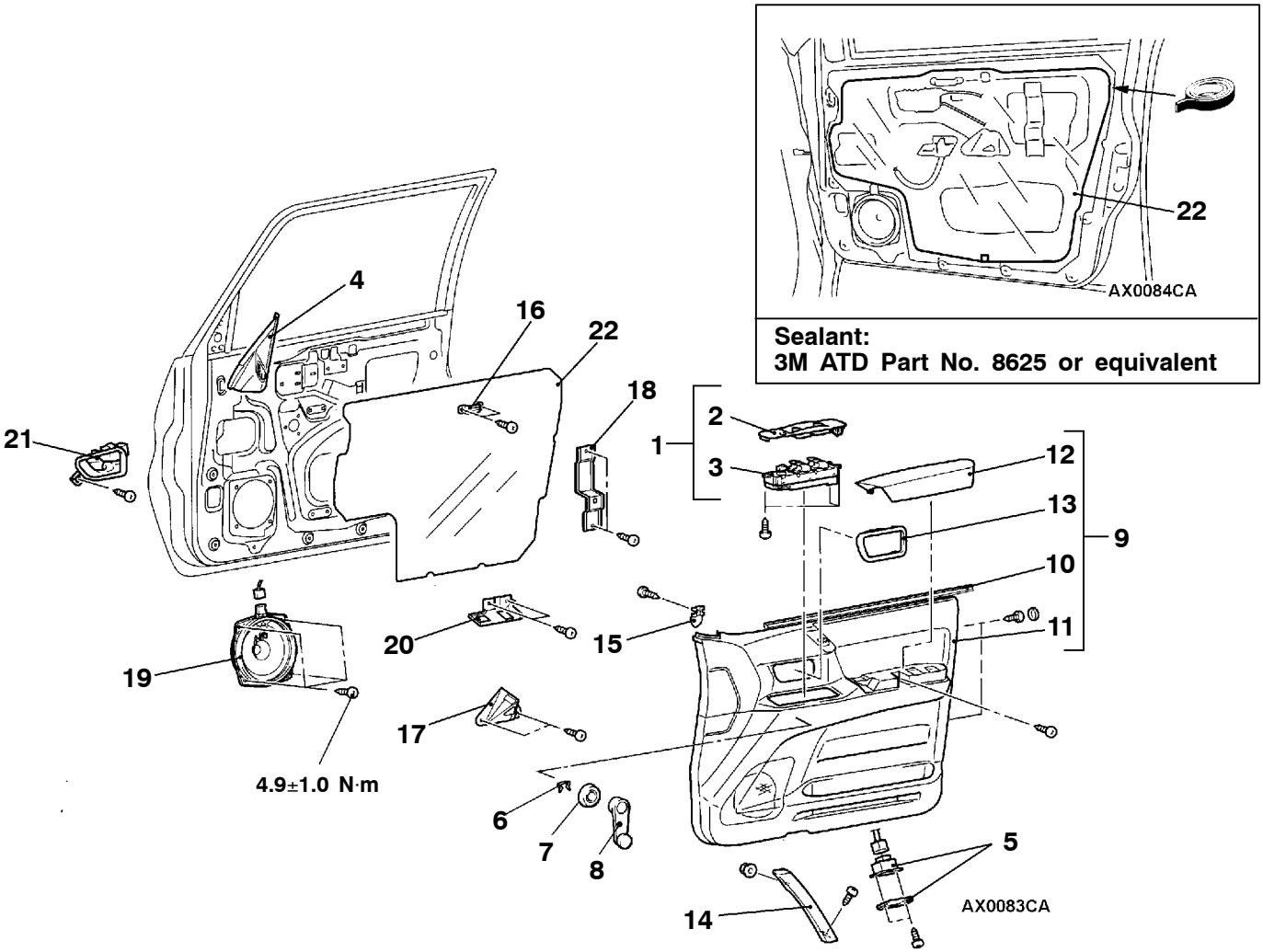

Removal steps

◀A▶ 1. Power window switch and power window switch panel assembly
2. Power window switch panel
3. Power window switch
4. Delta cover, inner
5. Door lamp assembly
◀B▶ ▶B◀ 6. Clip <Vehicles without power windows>
▶B◀ 7. Escutcheon <Vehicles without power windows>
▶B◀ 8. Regulator handle <Vehicles without power windows>
9. Door inside handle cover and door trim assembly
10. Door belt line moulding assembly
11. Door trim
12. Front arm restraint cover
◀C▶ 13. Door inside handle cover
14. Door grip
15. Grip bracket
16. Door grip upper retainer
17. Door grip lower bracket
18. Arm restraint bracket
19. Speaker
20. Power window switch bracket
21. Door inside handle
▶A◀ 22. Waterproof film

REAR DOOR

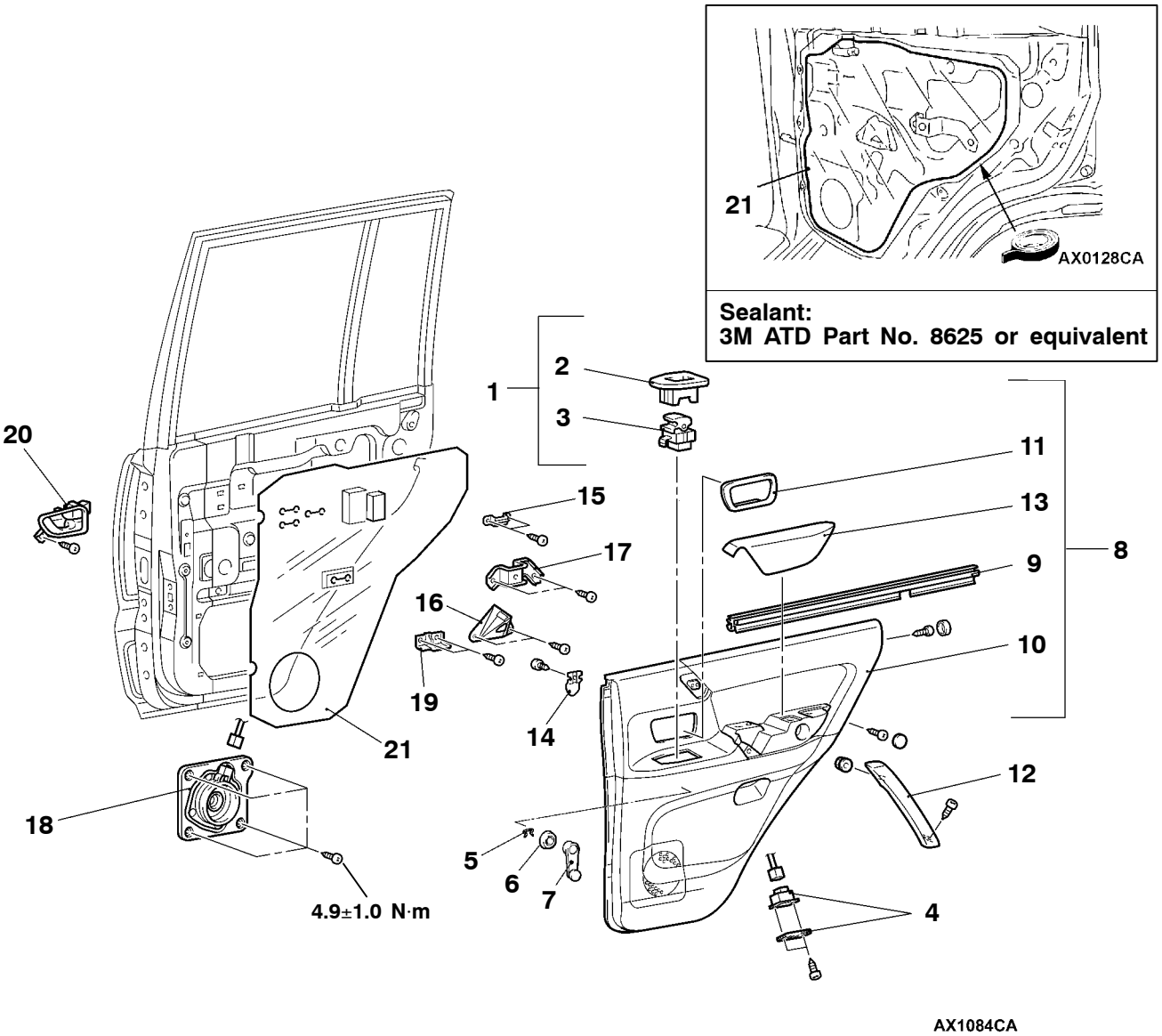

Removal steps

◀A▶ 1. Power window switch and power window switch panel assembly
2. Power window switch panel
3. Power window switch
4. Door lamp assembly
◀B▶ ▶B◀ 5. Clip <Vehicles without power windows>
▶B◀ 6. Escutcheon <Vehicles without power windows>
▶B◀ 7. Regulator handle <Vehicles without power windows>
8. Door inside handle cover
9. Door belt line moulding assembly
10. Door trim
◀C▶ 11. Door inside handle cover
12. Door grip
13. Rear arm restraint cover
14. Door grip bracket
15. Door grip upper retainer
16. Door grip lower bracket
17. Arm restraint bracket
18. Speaker
19. Power window switch bracket
20. Door inside handle
▶A◀ 21. Waterproof film

CLIP AND CLAW POSITIONS

FRONT DOOR

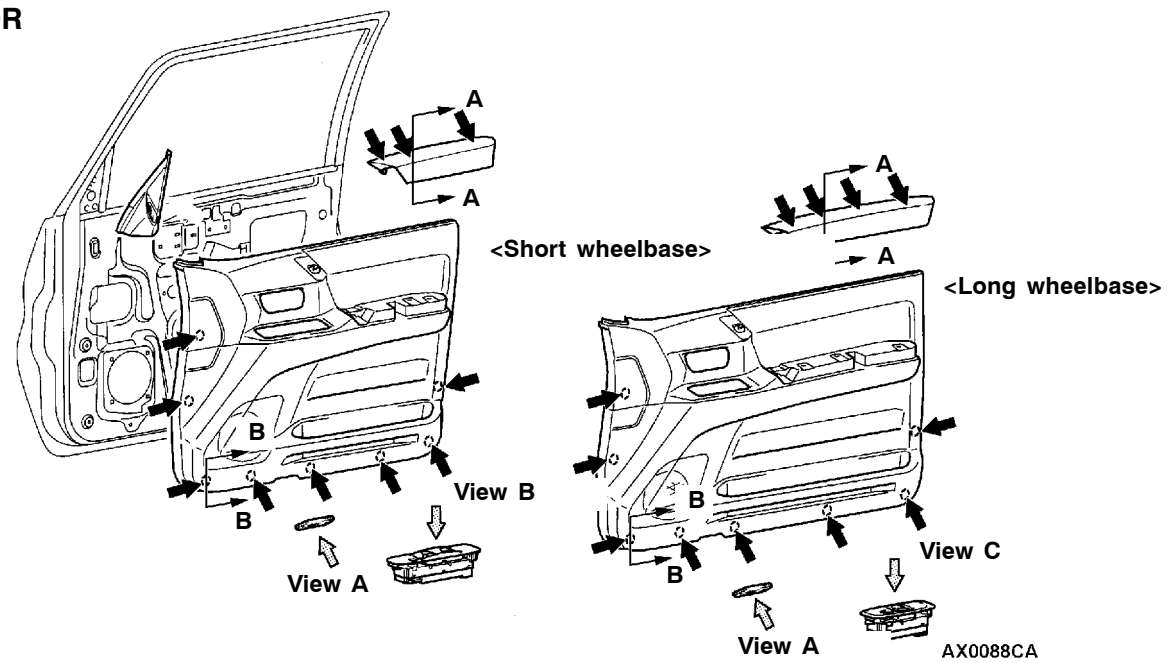

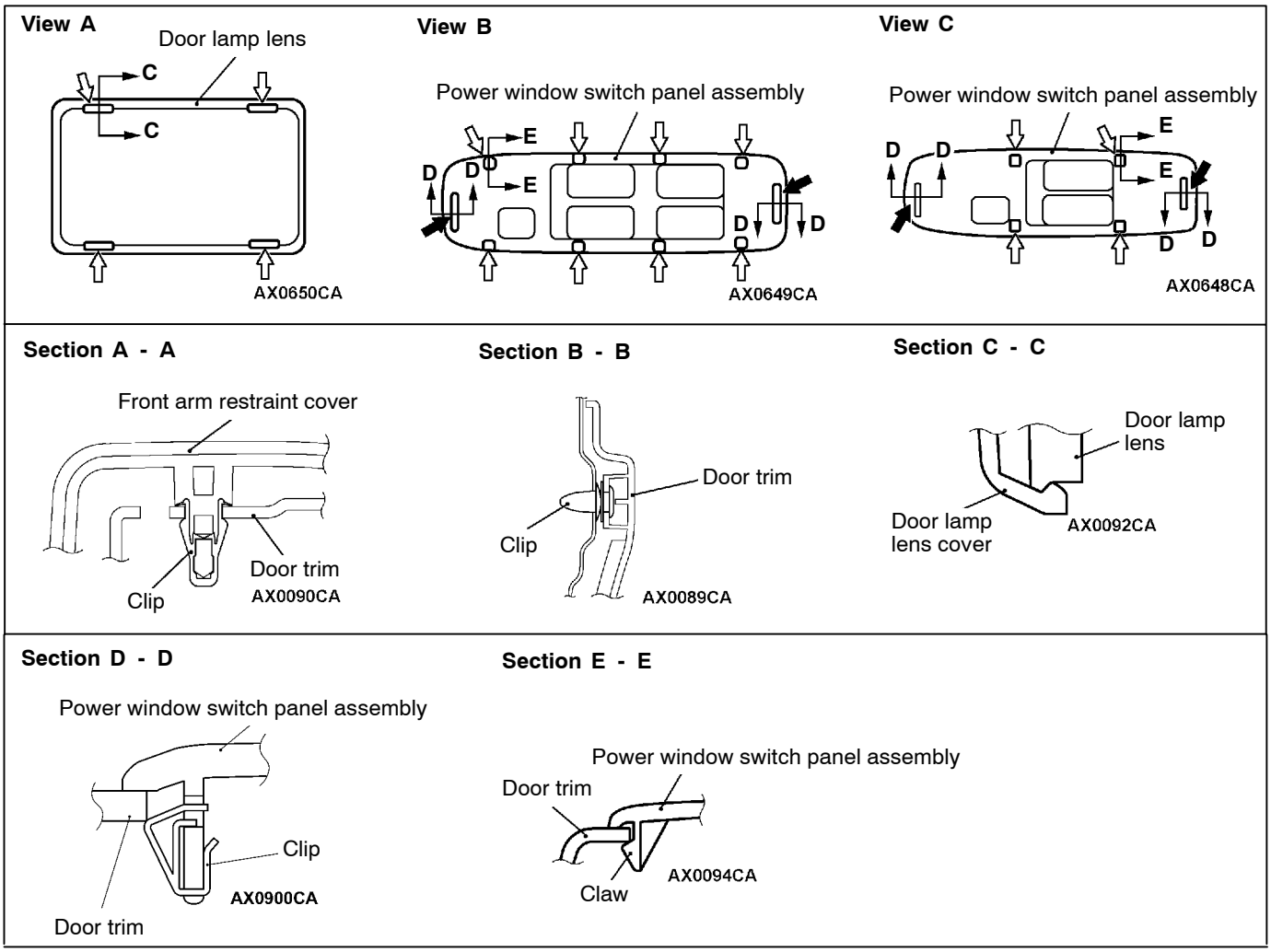

NOTE

⬅ : Clips positions

⇦ : Claws positions

REAR DOOR

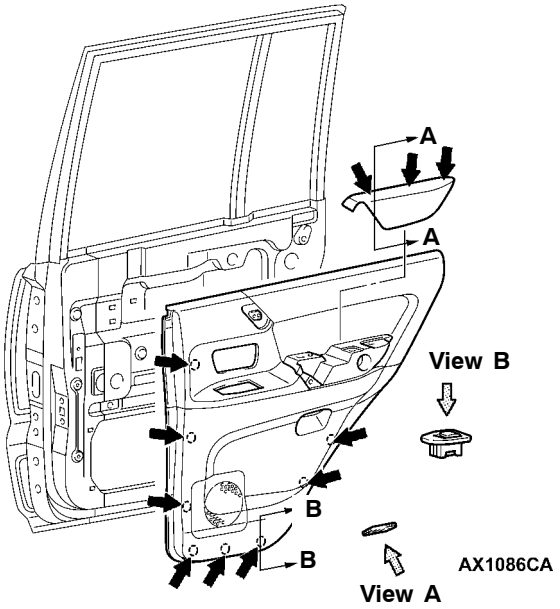

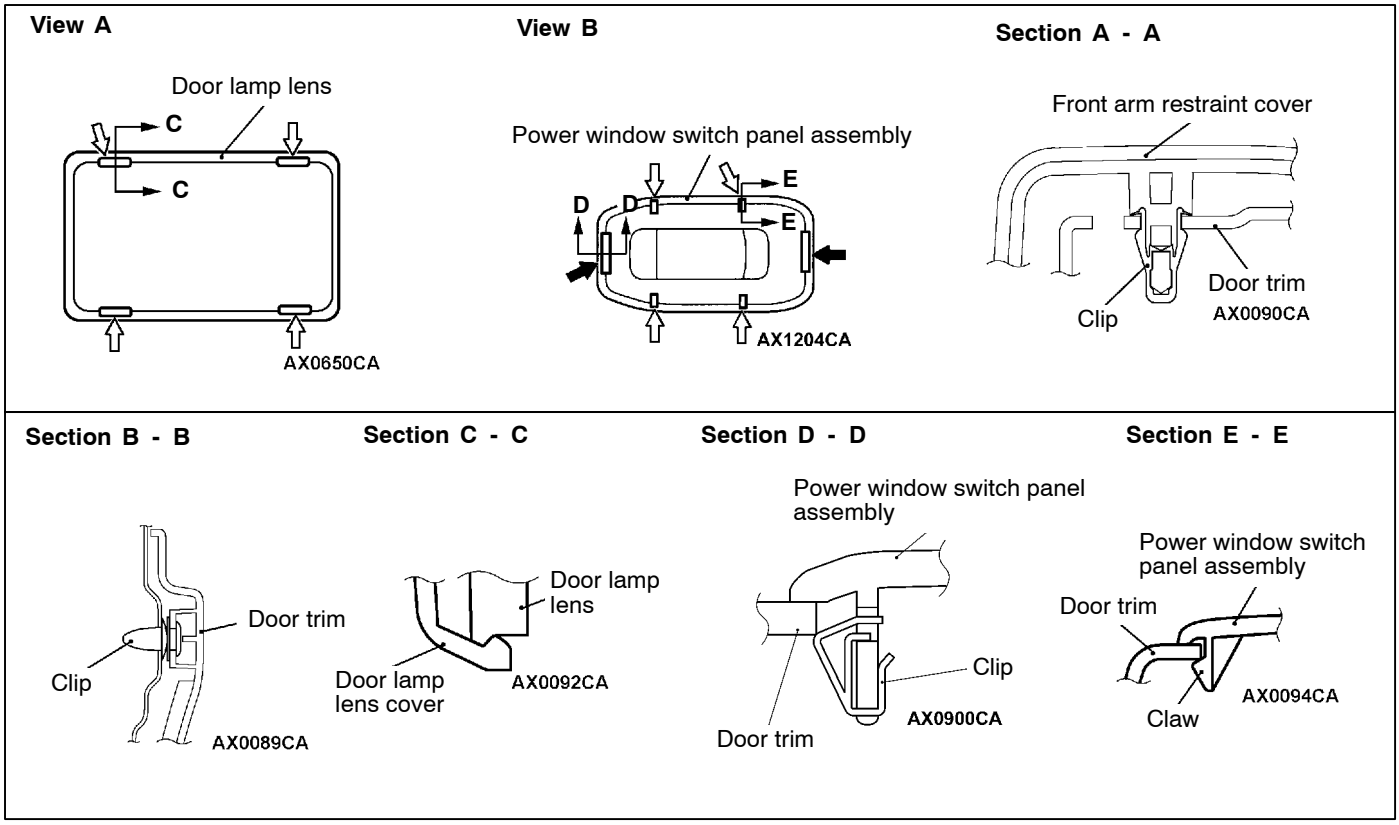

NOTE

⬅ : Clips positions

⇦ : Claws positions

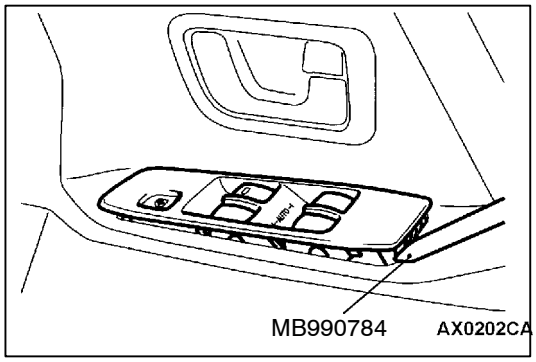

REMOVAL SERVICE POINTS

◀A▶ POWER WINDOW SWITCH AND POWER WINDOW SWITCH PANEL ASSEMBLY REMOVAL

Use the special tool to twist the front and rear of the power window switch and panel assembly to remove it. (Refer to P.42-26, 27, Clip and claw positions.)

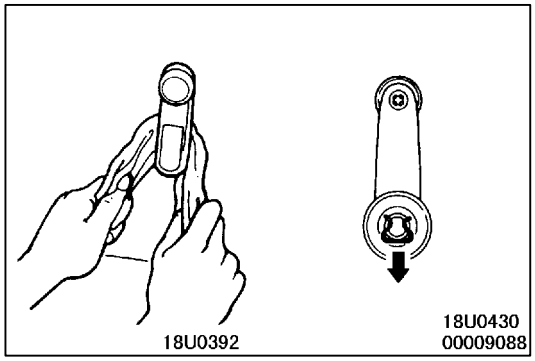

◀B▶ CLIP REMOVAL

Use a cloth to remove the clip as shown in the illustration.

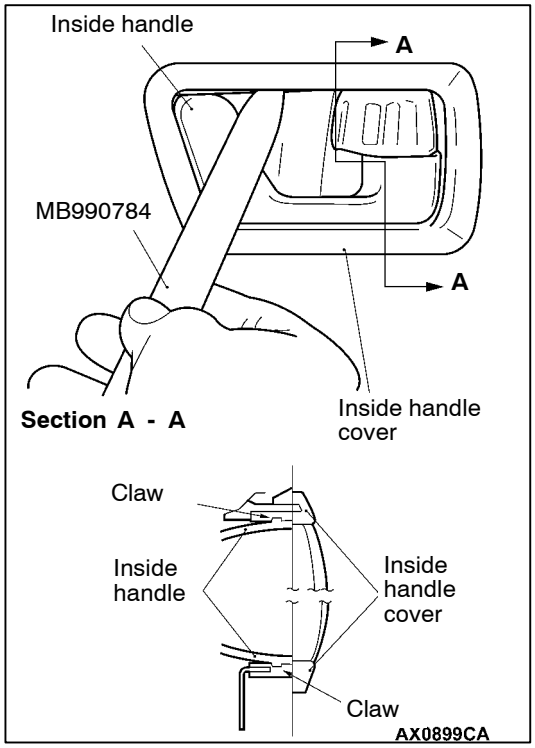

◀C▶ DOOR INSIDE HANDLE COVER REMOVAL

1. Insert the special tool between the inside handle upper part and the inside handle cover, and then disengage the upper claw of the inside handle.
2. Disengage the lower claw of the inside handle in the same manner as for the upper claw.
3. Remove the door trim.
4. Remove the inside handle cover from the door trim.

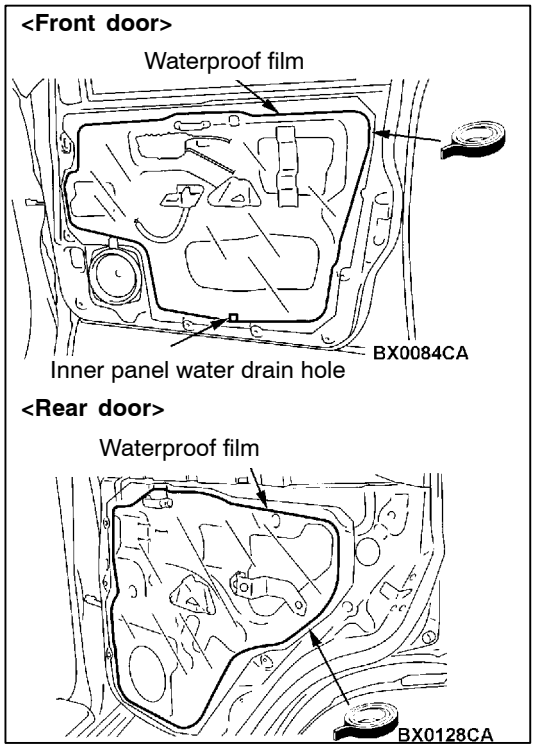

INSTALLATION SERVICE POINTS

▶A◀ WATERPROOF FILM INSTALLATION

Apply the specified sealant to the shown positions of waterproof film, and then attach the waterproof film.

Specified sealant: 3M ATD Part No. 8625 or equivalent

Caution
Be sure to apply the sealant below the inner panel water drain holes so as not to plug them.

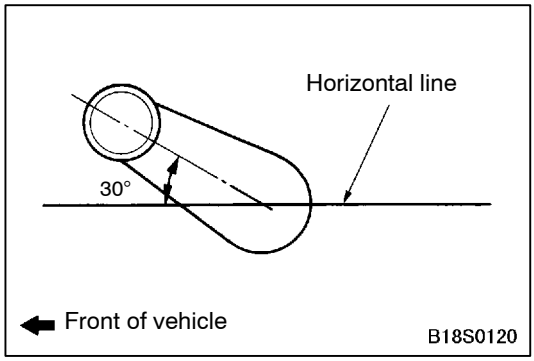

▶B◀ REGULATOR HANDLE/ESCUTCHEON/CLIP INSTALLATION

1. Install the clip and escutcheon to the regulator handle.
2. Close the front door window glass fully, and then install the regulator handle as shown in the illustration.

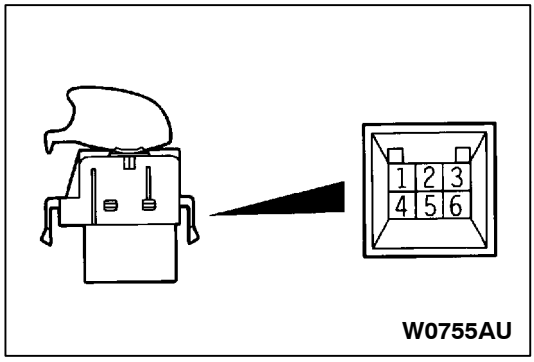

INSPECTION

POWER WINDOW SUB SWITCH CONTINUITY CHECK

Switch position	Terminal No.		
	1	4	6
UP		○——	——○
DOWN	○——	——○	

NOTE
Power window main switch uses SWS system, for the power window main switch check, refer to GROUP 54B - SWS.

DOOR GLASS AND REGULATOR

REMOVAL AND INSTALLATION

FRONT DOOR

Pre-removal Operation
Door Trim and Waterproof Film Removal (Refer to P.42-24.)

Post-installation Operation
- Door Window Glass Adjustment (Refer to P.42-20.)
- Door Trim and Waterproof Film Installation (Refer to P.42-24.)

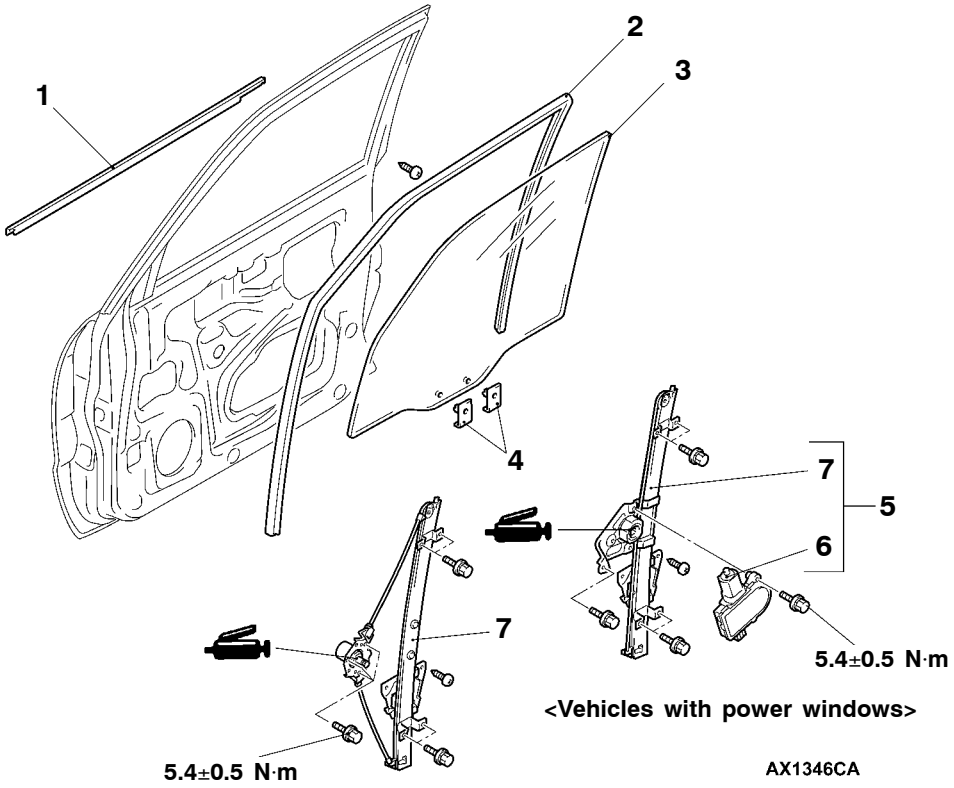

<Vehicles with power windows>

<Vehicles without power windows>

Door window glass removal steps

1. Door belt line moulding assembly
2. Door window glass runchannel
   ▶B◀ ● Check operation
3. Door window glass
4. Glass holder

Power window regulator and motor assembly removal steps

5. Power window regulator and motor assembly
   ▶A◀ 6. Power window motor assembly
   ▶A◀ 7. Power window regulator assembly

REAR DOOR

Pre-removal Operation
Door Trim and Waterproof Film Removal (Refer to P.42-25.)

Post-installation Operation
- Door Window Glass Adjustment (Refer to P.42-20.)
- Door Trim and Waterproof Film Installation (Refer to P.42-25.)

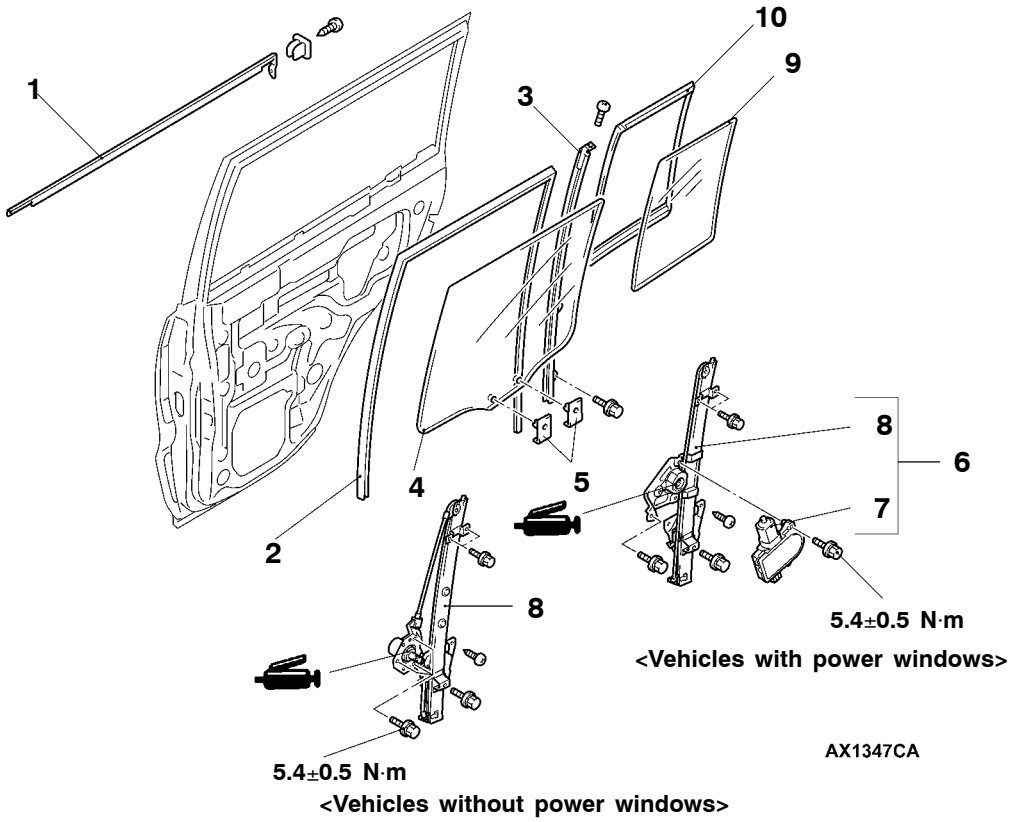

Removal steps

1. Door belt line moulding assembly
2. Door window glass runchannel
3. ◀A▶ ▶C◀ Center sash
   ▶B◀ ● Check operation
4. Rear door window glass
5. Glass holder
6. Power window regulator and motor assembly
7. ▶A◀ Power window motor assembly
8. ▶A◀ Power window regulator assembly
9. Stationary window glass
10. Stationary window weatherstrip

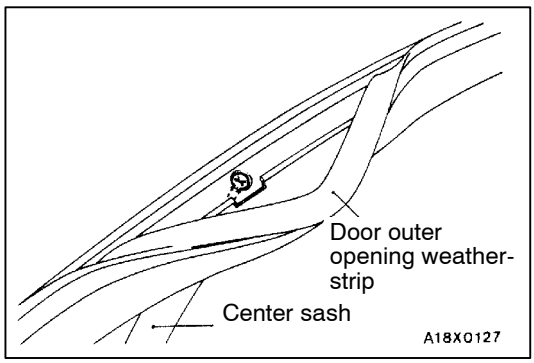

REMOVAL SERVICE POINT

◀A▶ CENTER SASH REMOVAL

1. Remove only the section of the door outer opening weatherstrip which is attached to the center sash.
2. Remove the center sash mounting screws, and then remove the center sash from the door panel.

INSTALLATION SERVICE POINTS

▶A◀ POWER WINDOW MOTOR ASSEMBLY/POWER WINDOW REGULATOR ASSEMBLY INSTALLATION

Power window motor assembly and window regulator assembly pre-installation operations

1. Connect the power window motor assembly to the body side harness connector, and then turn the ignition switch ON.
2. Operate the power window motor assembly for 5-10 seconds by pressing the power window switch to the UP position.

   NOTE
   This operation will cause the limit switch inside the power window motor assembly to be reset.

   Caution
   (1) The power window motor assembly should not be operated again until it is installed to the glass.
   (2) The clamping prevention function does not operate the first time that the glass is fully closed.

▶B◀ CHECK OPERATION

1. Install the glass to the power window motor assembly.
2. Press the power window switch to fully-close the glass, and then return the glass to the fully-open position.

   NOTE
   This operation will program the power window-ECU.

▶C◀ CENTER SASH INSTALLATION

Securely insert the center sash into the window rear sash (door).

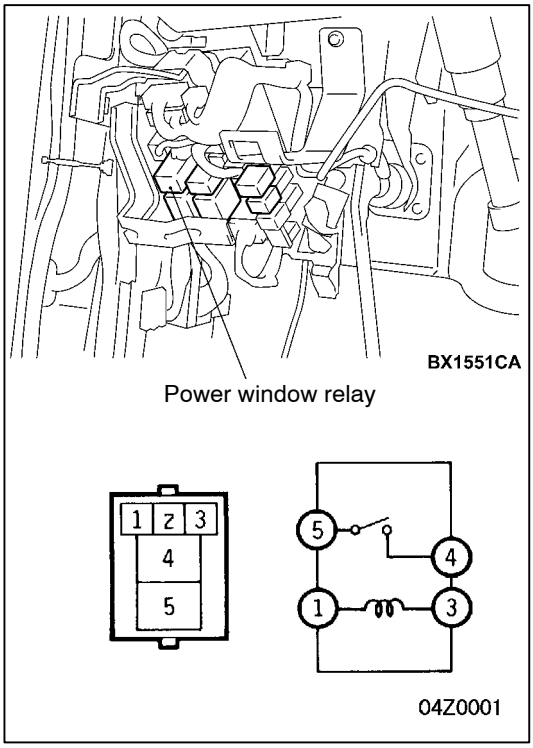

INSPECTION

POWER WINDOW RELAY CONTINUITY CHECK

Battery voltage	Terminal No.			
	1	3	4	5
Not applied	○	○		
Applied	⊕	⊖	○	○

DOOR HANDLE AND LATCH

REMOVAL AND INSTALLATION

Pre-removal Operation
Door Trim Removal (Refer to P.42-27.)

Post-installation Operation
- Door Inside Handle Play Check (Refer to P.42-21.)
- Door Outside Handle Play Check (Refer to P.42-21.)
- Door Trim Installation (Refer to P.42-24.)

FRONT DOOR

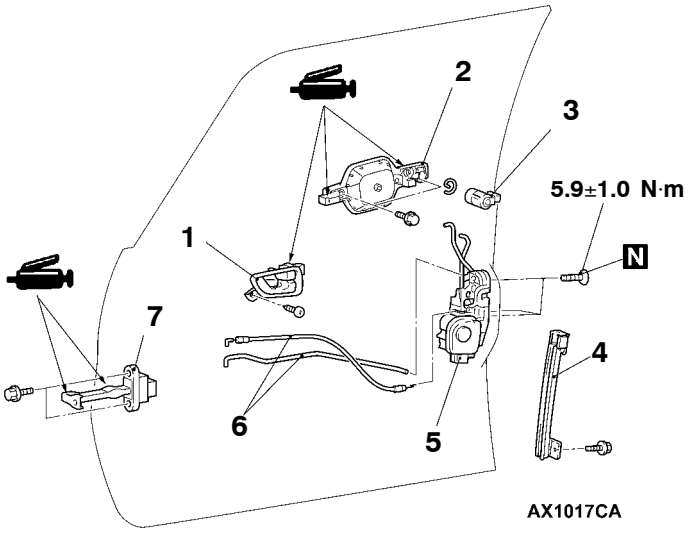

REAR DOOR

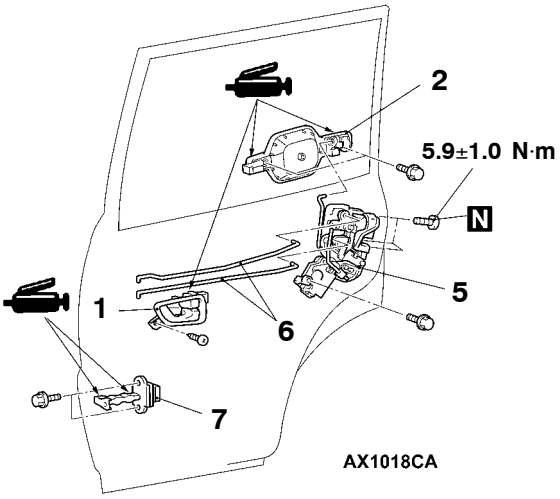

Door handle and door latch assembly removal steps

▶C◀ 1. Door inside handle
- Waterproof film (Refer to P.42-24.)

2. Door outside handle
3. Door lock key cylinder
▶B◀ 4. Rear lower sash
5. Door latch assembly
6. Link assembly

Door check removal steps

- Waterproof film (Refer to P.42-24.)

▶A◀ 7. Door check

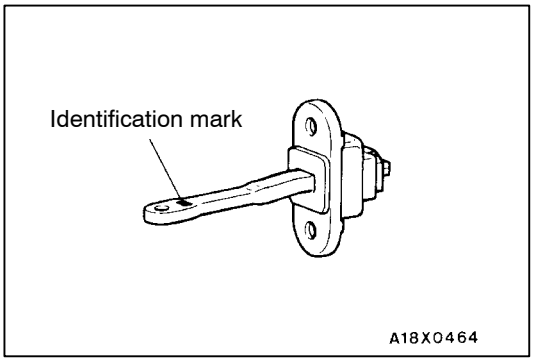

INSTALLATION SERVICE POINTS

▶A◀ DOOR CHECK INSTALLATION

Install with the following identification marks upward.

Items		Identification mark
Front door	Left door	20L
	Right door	20R
Rear door	Left door	26L
	Right door	26R

▶B◀ REAR LOWER SASH INSTALLATION

Be sure to install the rear lower sash to the window rear sash (at door) securely.

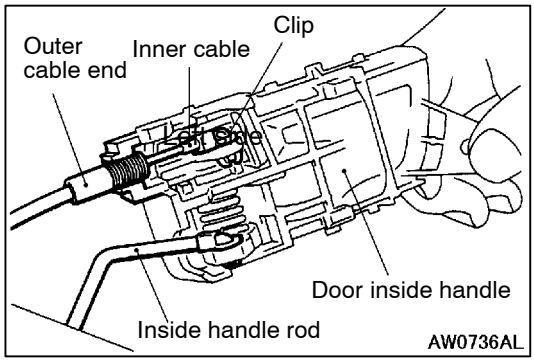

▶C◀ DOOR INSIDE HANDLE INSTALLATION

1. Install the inside lock cable to the door inside handle as follows:
   (1) Install the inner cable end in the inside lock cable to the clip in the door inside handle.
   (2) Turn the inside lock knob to the door lock position.
   (3) Install the outer cable end to the door inside handle securely.
   (4) Install the clip to the inner cable.
2. Install the inside handle rod to the door inside handle.
3. Install the door inside handle to the door.

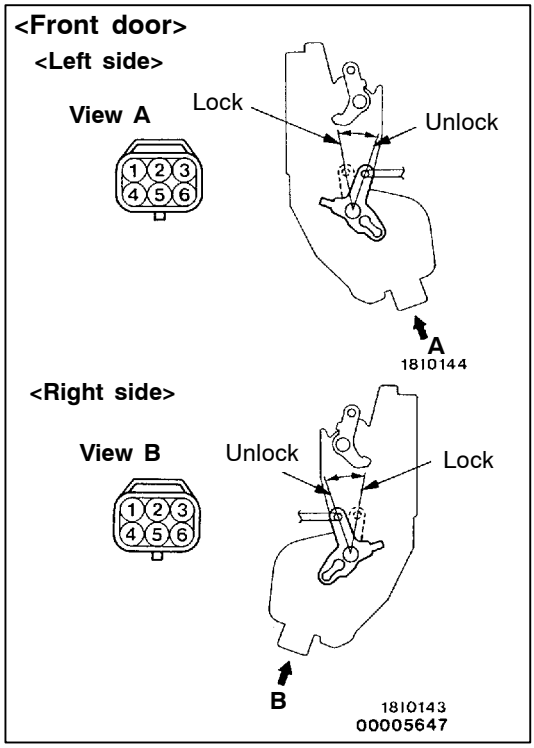

INSPECTION

DOOR LOCK ACTUATOR CHECK

Front door

<Left side>

Rod position	Terminal No.					Rod operation
	1	2	3	4	6	Rod operation
LOCK				⊕	⊖	LOCK to UNLOCK
UNLOCK				⊖	⊕	UNLOCK to LOCK
LOCK*	○		○			
UNLOCK*	○	○				

NOTE :
*: driver's side only

<Right side>

Rod position	Terminal No.					Rod operation
	1	2	3	4	6	Rod operation
LOCK				⊖	⊕	LOCK to UNLOCK
UNLOCK				⊕	⊖	UNLOCK to LOCK
LOCK*	○		○			
UNLOCK*		○	○			

NOTE :
*: driver's side only

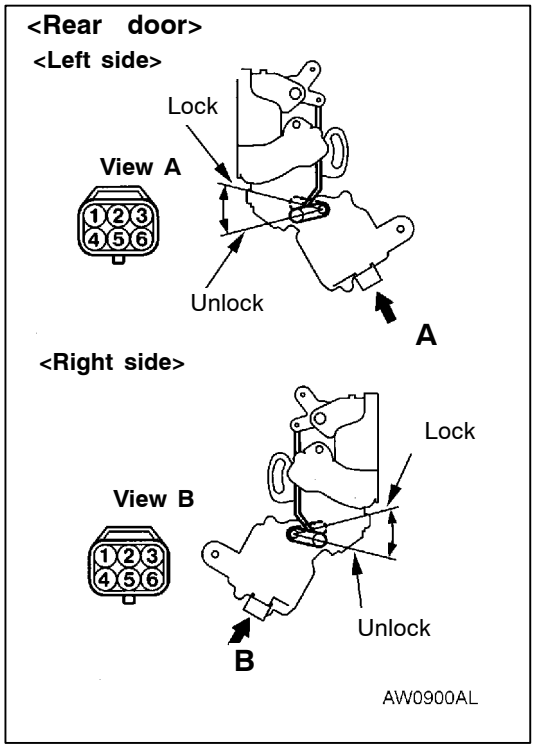

Rear door

<Left side>

Rod position	Terminal No.		Rod operation
	2	3	
LOCK	⊕	⊖	LOCK to UNLOCK
UNLOCK	⊖	⊕	UNLOCK to LOCK

<Right side>

Rod position	Terminal No.		Rod operation
	2	3	
LOCK	⊖	⊕	LOCK to UNLOCK
UNLOCK	⊕	⊖	UNLOCK to LOCK

WINDOW GLASS RUNCHANNEL AND DOOR OPENING WEATHERSTRIP

REMOVAL AND INSTALLATION

FRONT DOOR

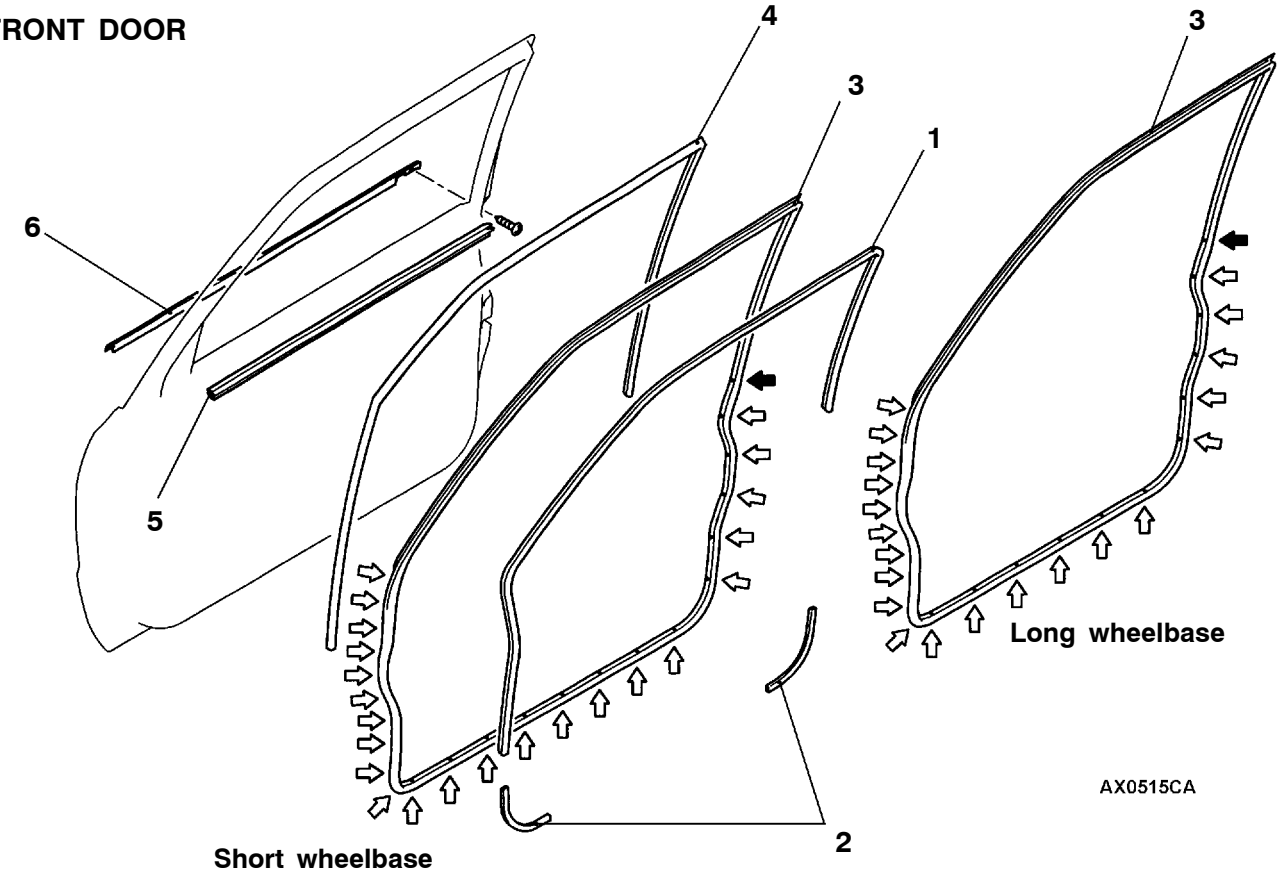

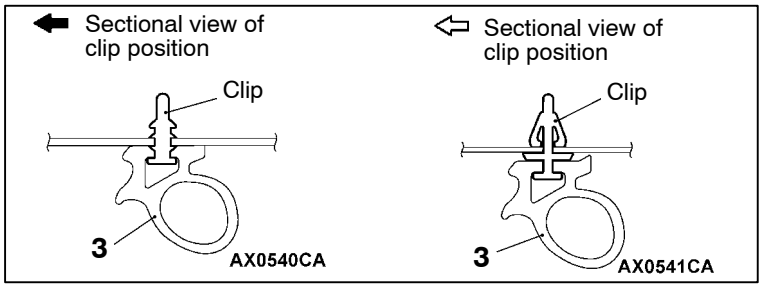

Door inner opening weatherstrip removal steps

▶B◀ 1. Door inner opening weatherstrip
- Scuff plate (Refer to GROUP 52A.)
- Cowl side trim (Refer to GROUP 52A.)
- Center pillar lower trim (Refer to GROUP 52A.)

▶B◀ 2. Edge seal rubber

Door outer opening weatherstrip removal steps

- Front door check mounting bolts (door side) (Refer to P.42-22.)

◀A▶ 3. Door outer opening weatherstrip

Door window glass runchannel removal steps

▶A◀ 4. Door window glass runchannel
- Front door trim (Refer to P.42-24.)

5. Door belt line inner weatherstrip

Door beltline moulding removal

6. Door beltline moulding

REAR DOOR

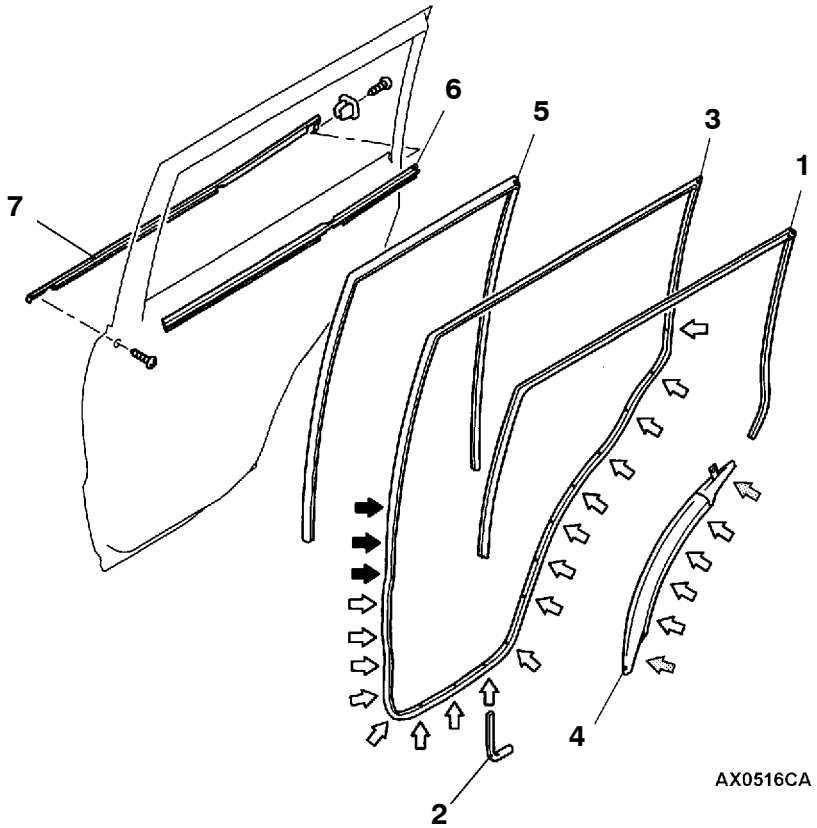

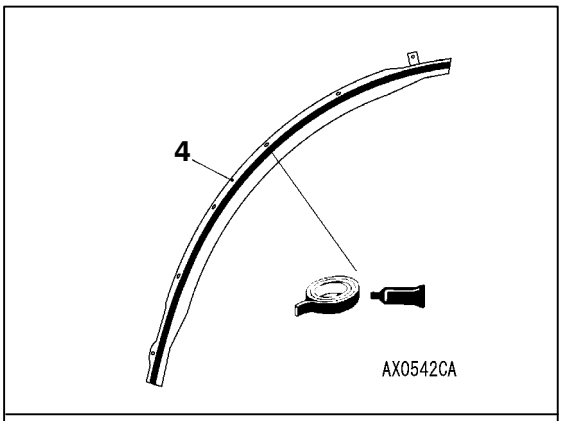

Adhesive tape:
Double-sided tape [23 mm width and 0.8 mm thickness], dry adhesive

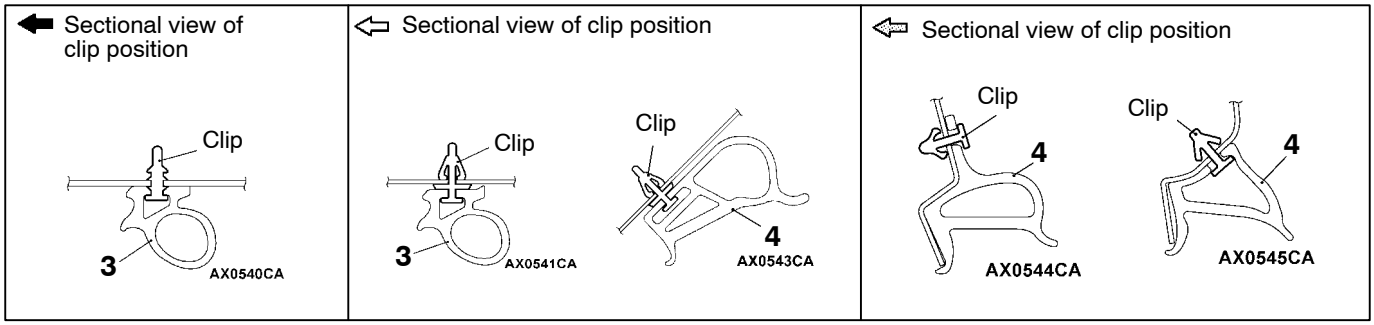

Door inner opening weatherstrip removal steps

▶B◀ 1. Door inner opening weatherstrip
- Center pillar lower trim (Refer to GROUP 52A.)

▶B◀ 2. Edge seal rubber

Door outer opening weatherstrip removal steps

- Rear door check mounting bolts (door side) (Refer to P.42-23.)

◀A▶ 3. Door outer opening weatherstrip
4. Door outer opening lower weather-strip

Door window glass runchannel removal steps

▶A◀ 5. Door window glass runchannel
- Rear door trim (Refer to P.42-25.)

6. Door belt line inner weatherstrip

Door beltline moulding removal

7. Door beltline moulding

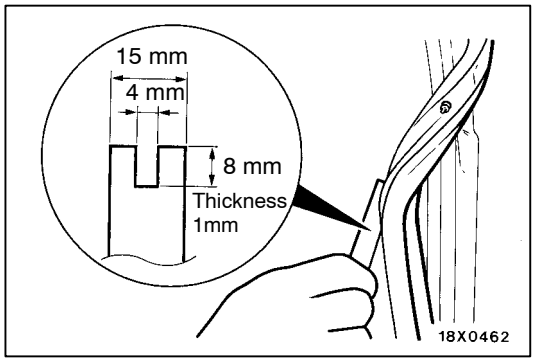

REMOVAL SERVICE POINT

◀A▶ DOOR OUTER OPENING WEATHERSTRIP REMOVAL

Make a tool as shown and remove the door opening weatherstrip.

INSTALLATION SERVICE POINTS

▶A◀ DOOR WINDOW GLASS RUNCHANNEL INSTALLATION

When installing the door window glass runchannel, remove the waterproof film.

▶B◀ EDGE SEAL RUBBER/DOOR INNER OPENING WEATHERSTRIP INSTALLATION

Attach the edge seal rubber and door inner opening weatherstrip in the places specified below.

Edge seal rubber and door inner weatherstrip attachment locations

FRONT DOOR

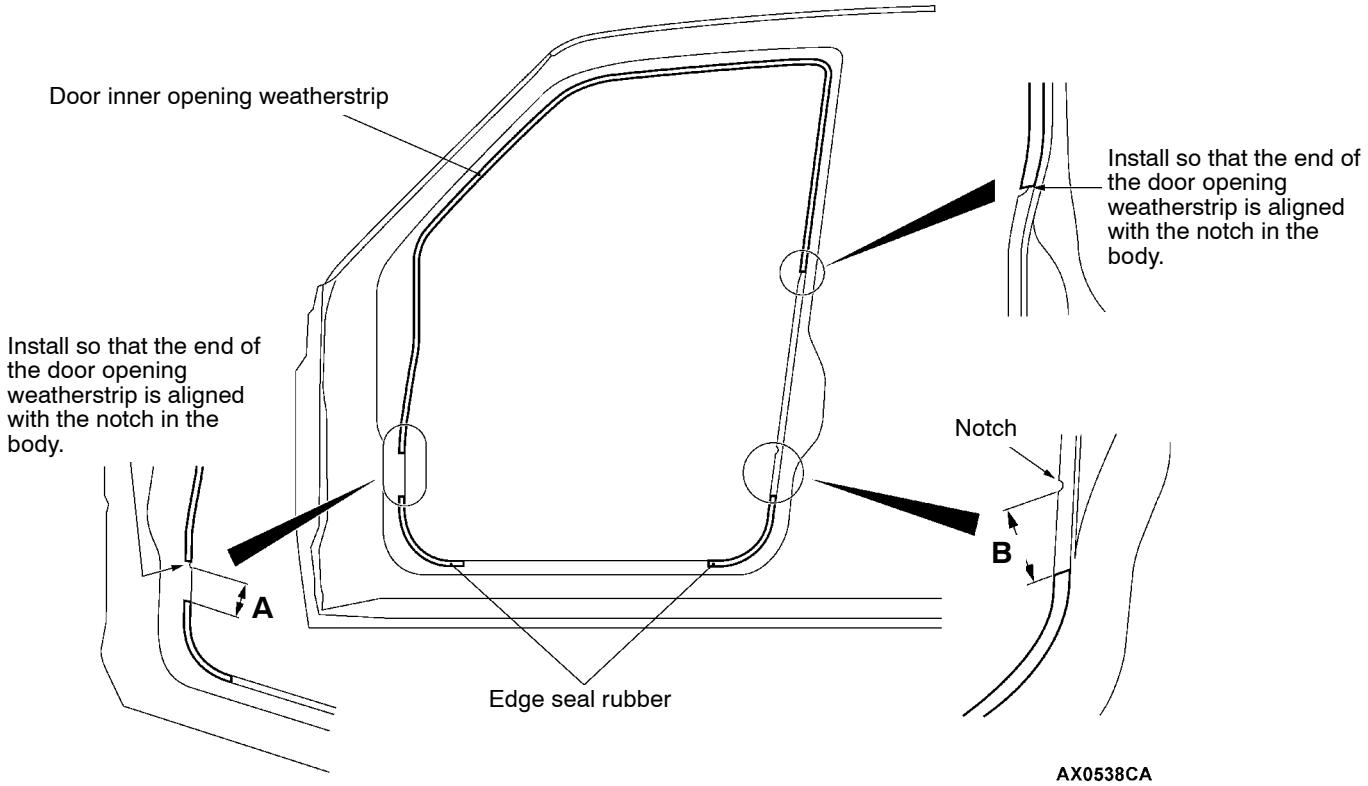

A: 87 mm
B: 106 mm (Long wheelbase)
B: 98 mm (Short wheelbase)

REAR DOOR

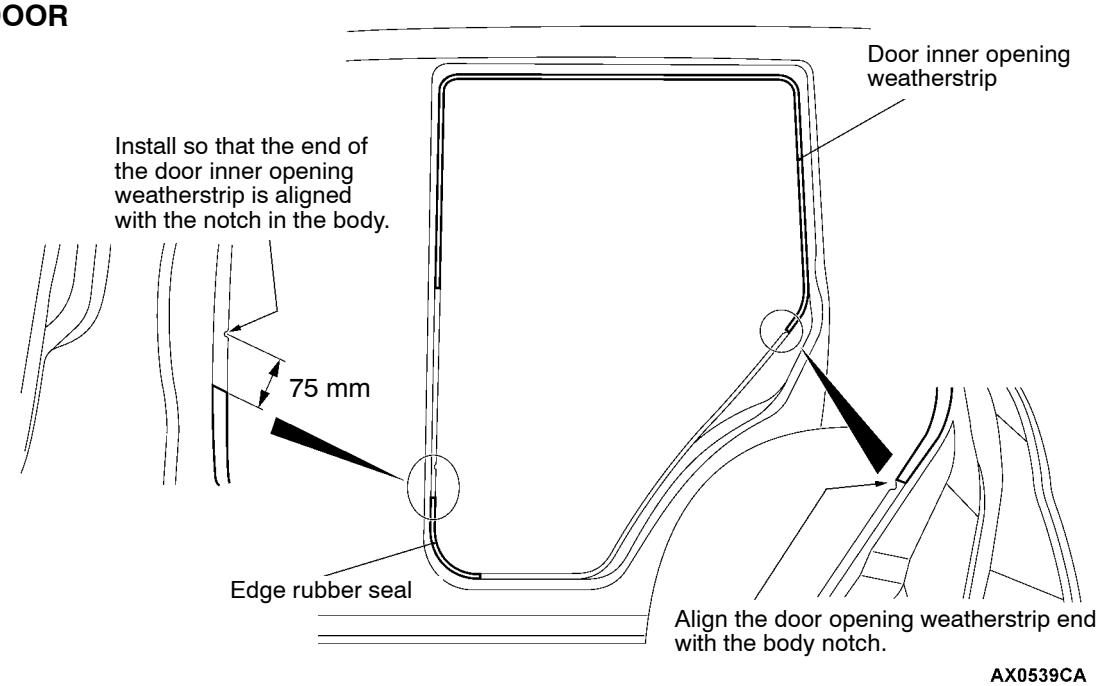

BACK DOOR

SERVICE SPECIFICATION

Item	Standard value
Back door handle play mm	2.3

SEALANT

Item	Specified sealant	Remark
Waterproof film	3M ATD Part No. 8625 or equivalent	Ribbon sealer

SPECIAL TOOL

Tool	Number	Name	Use
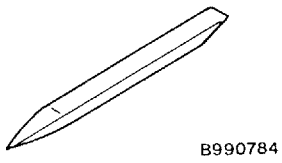	MB990784	Ornament remover	Back door trim removal

TROUBLESHOOTING

NOTE
Power window main switch uses SWS system, for the power window main switch check, refer to GROUP 54B - SWS.

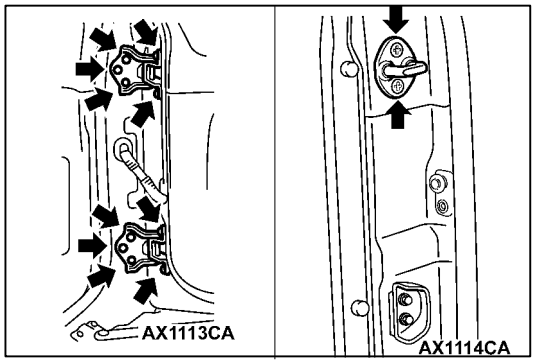

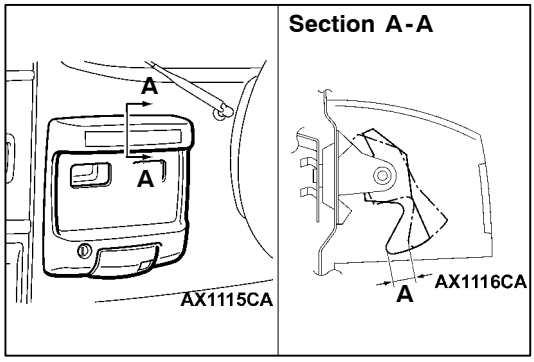

ON-VEHICLE SERVICE

BACK DOOR FIT ADJUSTMENT

1. If the striker and latch mesh badly, move the striker forward and backward or right and left to adjust.
2. If uneven clearance is present between back door and body, reposition the hinge and striker and/or change the thickness of shim (change the number of shim) to adjust the clearance.

BACK DOOR HANDLE PLAY CHECK

1. Measure the back door handle play.

   Standard value (A): 2.3 mm
2. If the back door handle play is not within the standard value, check the back door handle and door latch assembly. Replace if necessary.

BACK DOOR ASSEMBLY

REMOVAL AND INSTALLATION

Pre-removal Operation
- High-mounted Stop Lamp Removal (Refer to GROUP 54A.)
- Spare Tyre Removal)

Pre-removal Operation
- High-mounted Stop Lamp Installation (Refer to GROUP 54A.)
- Spare Tyre Installation
- Back Door Fit Adjustment (Refer to P.42-40.)

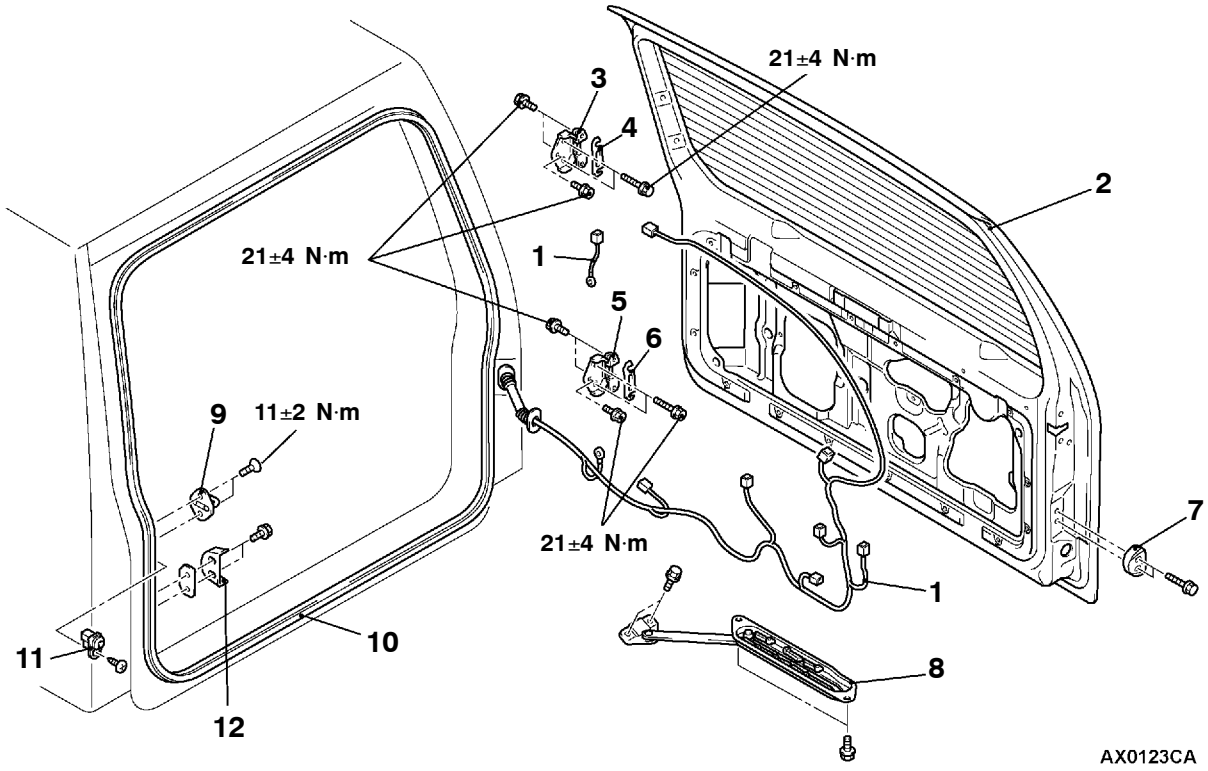

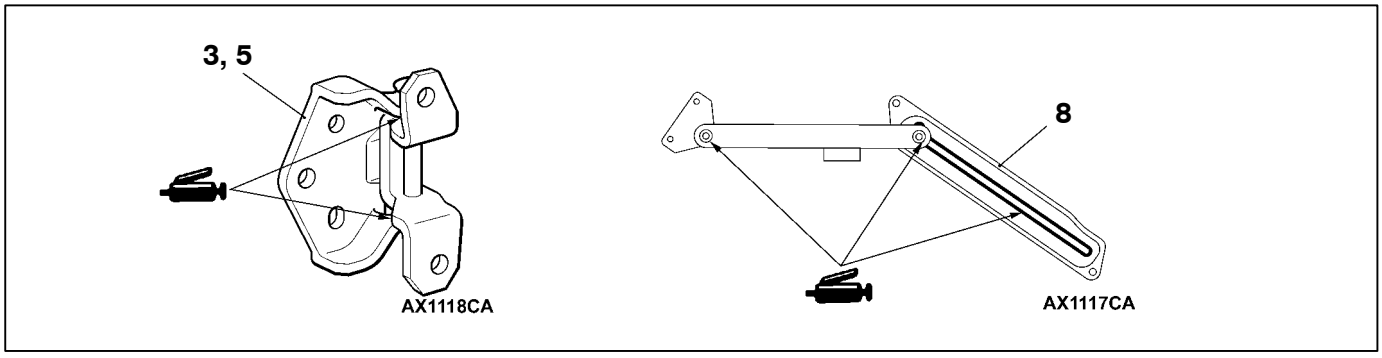

Removal steps
- Back door trim and waterproof film (Refer to P.42-43.)

1. Harness connector
2. Back door assembly
3. Back door upper hinge
4. Shim
5. Back door lower hinge
6. Shim
7. Damper mail
8. Back door stopper
9. ▶B◀ Striker
10. ▶A◀ Back door opening weatherstrip
11. Door switch
12. Back door bumper, female

INSTALLATION SERVICE POINTS

▶A◀ BACK DOOR OPENING WEATHERSTRIP INSTALLATION

Align the marking section on the back door opening weatherstrip with the centre of the body.

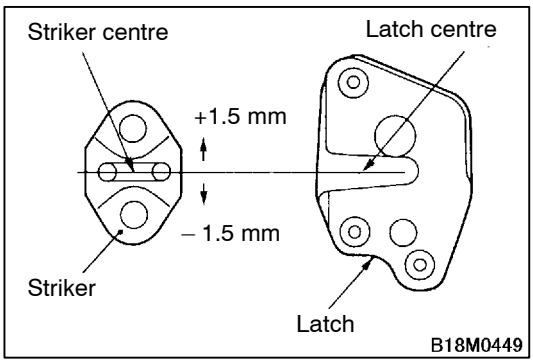

▶B◀ STRIKER INSTALLATION

Install the striker so that the striker centre does not deviate more than ±1.5 mm from the latch centre.

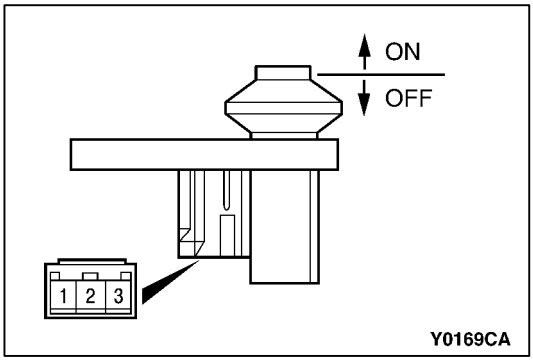

INSPECTION

DOOR SWITCH CONTINUITY CHECK

Switch position	Terminal No.		
	1	2	3
Released (ON)	○	○	○
Pressed (OFF)			

BACK DOOR TRIM AND WATERPROOF FILM

REMOVAL AND INSTALLATION

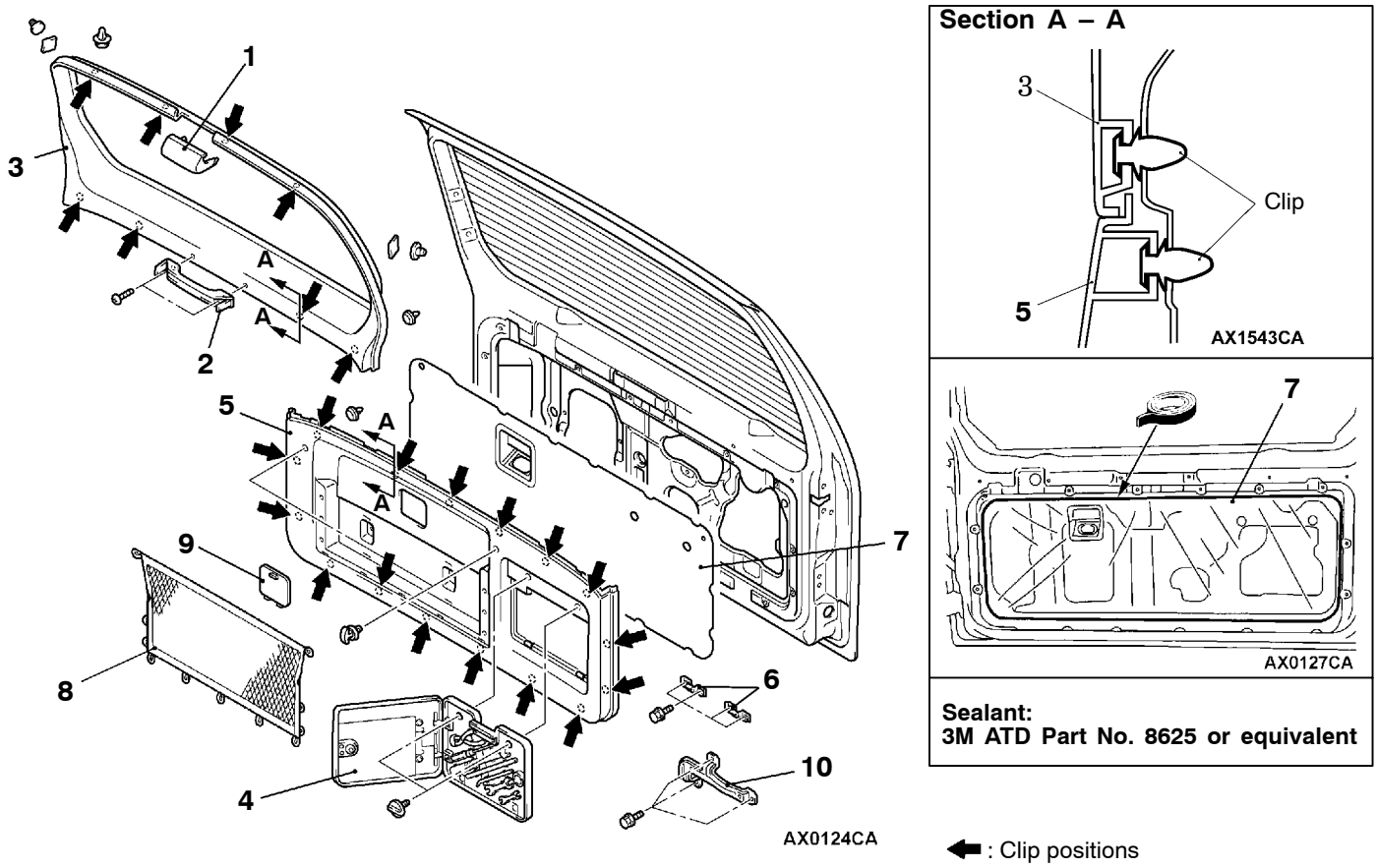

Removal steps

1. High-mounted stop lamp cover
   - High-mounted stop lamp (Refer to GROUP 54A.)
2. ▶A◀ Door pull handle
3. Back door upper trim
4. Toolbox assembly
5. Back door lower trim
6. Toolbox bracket, lower
7. Waterproof film
8. Back door lid
9. Washer tank lid
10. Toolbox bracket, upper

INSTALLATION SERVICE POINT

▶A◀ DOOR PULL HANDLE INSTALLATION

Install so that the arrow on the underside is pointing upwards.

BACK DOOR HANDLE AND LATCH

REMOVAL AND INSTALLATION

Post-installation Operation
Outside Handle Play Check (Refer to P.42-40.)

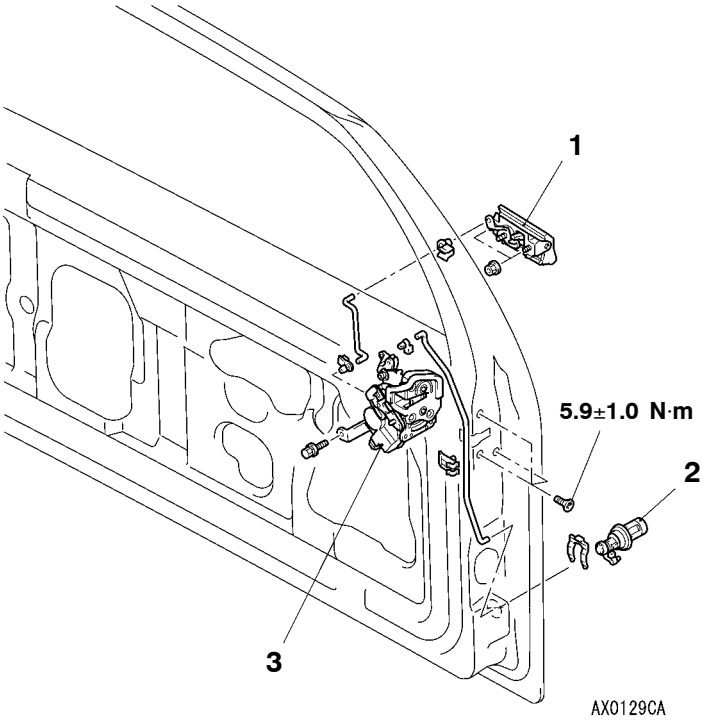

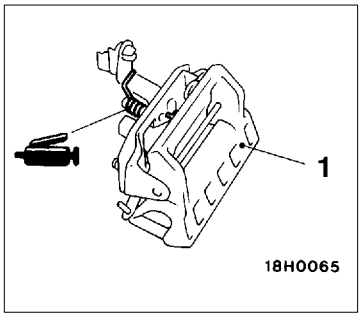

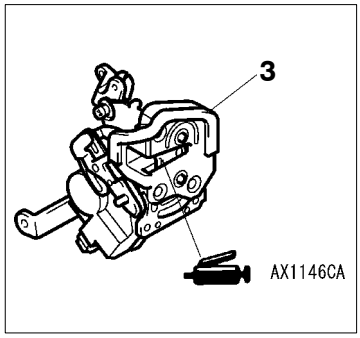

Back door handle and lock key cylinder removal steps

- Back door trim and waterproof film (Refer to P.42-43.)
- Back door garnish (Refer to GROUP 51.)

1. Back door handle
2. Back door lock key cylinder

Back door latch removal steps

- Back door trim and waterproof film (Refer to P.42-43.)

3. Back door latch assembly

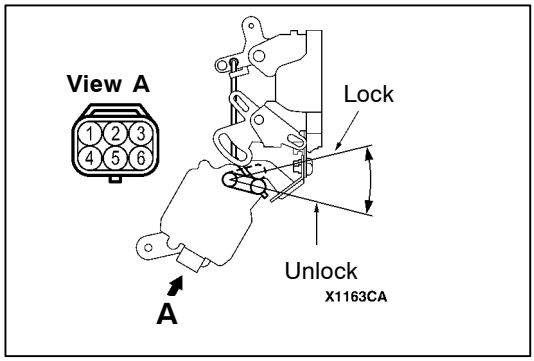

INSPECTION

BACK DOOR LOCK ACTUATOR CHECK

Rod position	Terminal No.		Rod operation
	2	3	
LOCK	⊖	⊕	LOCK to UNLOCK
UNLOCK	⊕	⊖	UNLOCK to LOCK

KEYLESS ENTRY SYSTEM

TROUBLESHOOTING

The keyless entry system is controlled by the Smart Wiring System (SWS). For troubleshooting, refer to GROUP 54B - Troubleshooting.

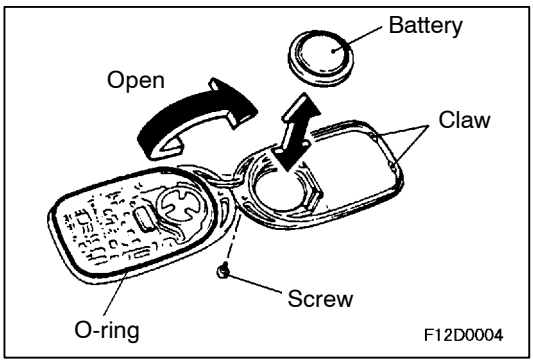

ON-VEHICLE SERVICE

HOW TO REPLACE A BATTERY OF THE TRANSMITTER

1. Remove the set screw to remove the battery from the transmitter.
2. Install a battery with its (+) side face-down.

   Battery required for replacement:
   Coin type battery CR2032
3. Insert the claw first, and with care not to displace the O-ring, assemble the transmitter.
4. Check to see if the keyless entry system operates.

   NOTE
   (1) Do not let water or dust stick to the inside of the transmitter when it is open. Also, do not touch the precision electronic device.
   (2) If the O-ring is displaced during the assembly of the transmitter, water or dust penetrates in it causing trouble.

ENCRYPTED CODE REGISTRATION METHOD

Each individual encrypted code is registered inside the transmitter, and so it is necessary to register these codes with the EEPROM inside the ETACS-ECU in the following cases.

- When either the transmitter or ETACS-ECU is replaced;
- If a second transmitter is to be used;
- If it appears that a problem is occurring because of faulty registration of a code.

A maximum of four different codes can be stored in the memory area of the EEPROM (four different transmitters can be used). When the code for the first transmitter is registered, the previously-registered codes for four transmitters are cleared. Therefore, if you are using more than two transmitters or are adding a second transmitter, the codes for all the transmitters must be registered at the same time.

1. Check that the doors lock normally when the ignition key is inserted into the door key cylinder and turned.
2. Insert the ignition key in the ignition switch.
3. Connect the MUT-II to the diagnosis connector.

NOTE
This sets the system in encrypted code registration standby mode. If MUT-II is not used, connect terminal No.1 of the diagnosis connector to earth.

Caution
Always turn the ignition switch to LOCK (OFF) position before connecting and disconnecting the MUT-II or earth.

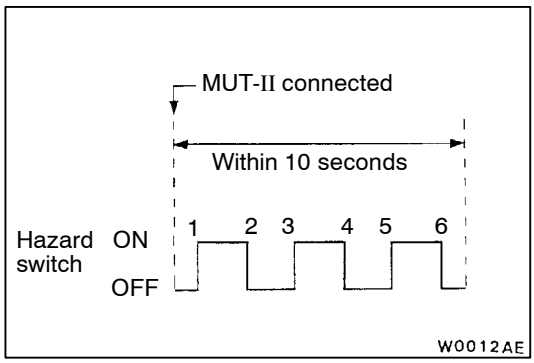

4. Within 10 seconds after connecting the MUT-II or earth, press the hazard switch six times.

   NOTE
   (1) The doors will lock and unlock once after pressing the hazard switch six times, and the system will switch to registration mode.
   (2) The hazard switch alternates between ON and OFF each time pressing the hazard switch (Refer to illustration).
5. Press the lock switch or unlock switch of the transmitter switch, and then press it two times within 10 seconds of the first press. This will register the code.
6. After registration is completed, the doors will be automatically locked and unlocked once.
7. If you are using more than two transmitters or have added a second transmitter, the same registration procedure should be carried out for the remaining transmitters, and it should be carried out within one minute after registration of the code for the first transmitter has been completed. The registration procedure are all the same for all transmitters.
8. Registration mode will be terminated under the following conditions.
   - When the encrypted codes for four transmitters have been registered;
   - When one minute has passed after registration mode started;
   - When the MUT-II is disconnected (earth is released);
   - When the ignition key is removed;
9. After registration mode has been completed, carry out the followings to make sure that the keyless entry system operates.
   - Pull the ignition key out.
   - Close all of the doors.

KEYLESS ENTRY SYSTEM

REMOVAL AND INSTALLATION

For the removal and installation of the ETACS-ECU, refer to GROUP 54A.

SUNROOF

SERVICE SPECIFICATION

Items	Standard value
Roof lid glass operating current A (at 20°C)	7 or less

TROUBLESHOOTING

The sunroof is controlled by the SWS (Smart Wiring System). For troubleshooting procedures, refer to GROUP 54B - SWS Diagnosis.

ON-VEHICLE SERVICE

WATER TEST

Check if there are any leaks in the sunroof by the following procedure.

1. Fully close the roof lid glass.
2. Adjust the water pressure so that water comes out of the hose to a height of approximately 50 cm when the hose is held vertically facing upwards.

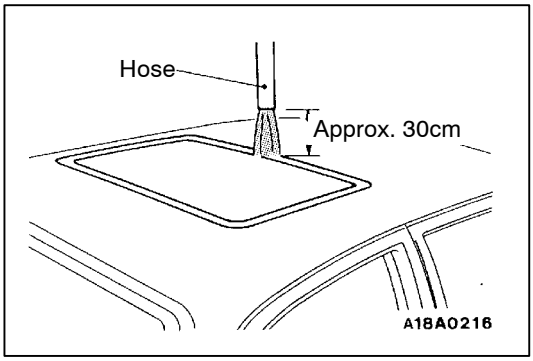

3. Hold the end of the hose approximately 30 cm above the roof and let the water run onto the weatherstrip for 5 minutes or more.
4. While letting the water run onto the weatherstrip, check that there is no water leaking into the passenger compartment.

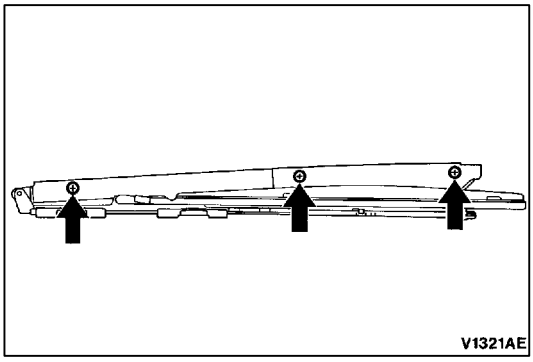

SUNROOF FIT ADJUSTMENT

1. Fully close the roof lid glass.
2. Fully open the sunshade.
3. Loosen the roof lid glass assembly mounting screws, and then slide the roof lid glass assembly along the slot in the mechanism assembly to adjust the height of the roof lid glass.
4. After adjustment, check to be sure that the sunroof operates smoothly.

SUNROOF

REMOVAL AND INSTALLATION

Post-installation Operation
- Sunroof Water Test (Refer to P.42-47.)
- Sunroof Fit Adjustment (Refer to P.42-47.)

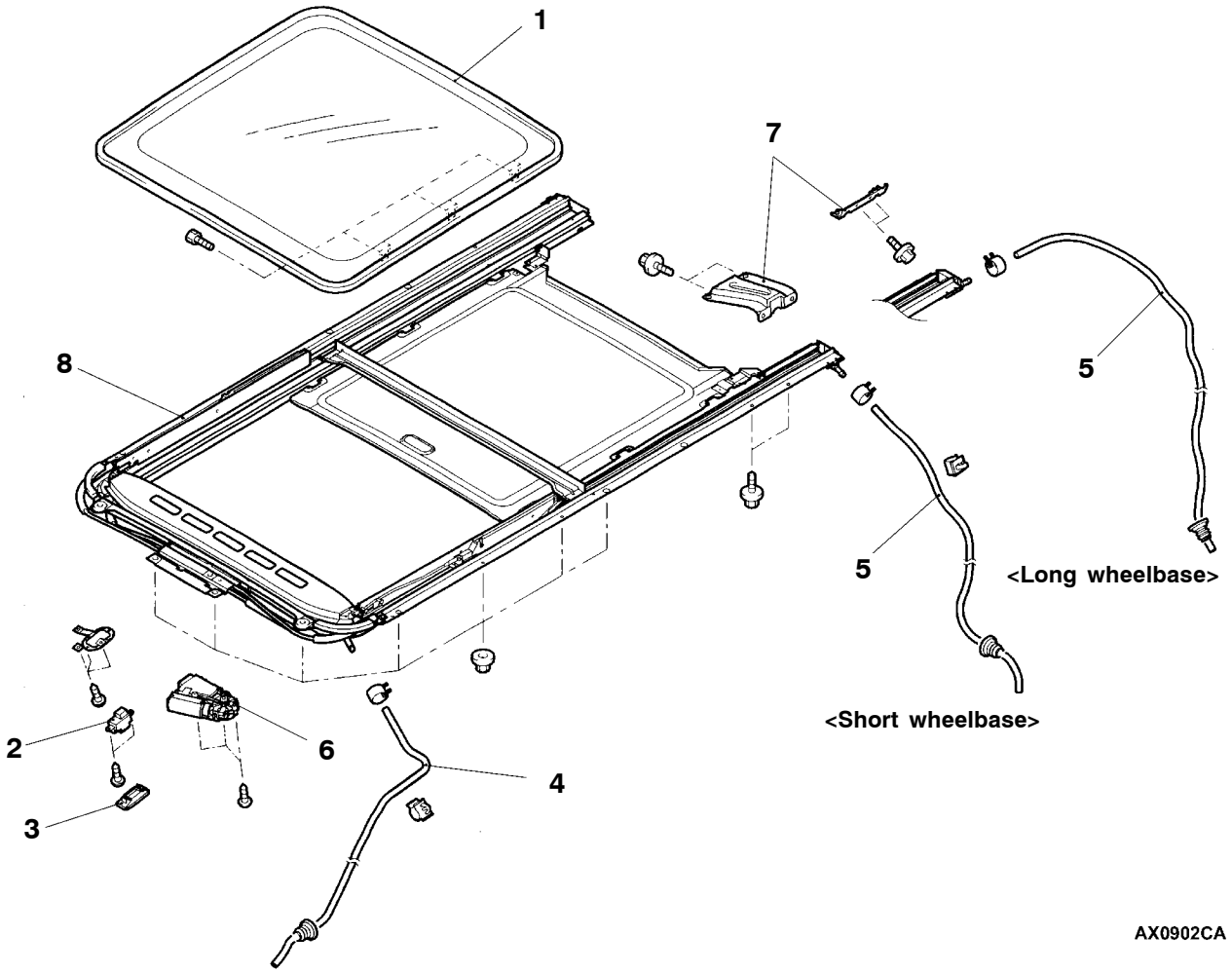

1. Roof lid glass assembly

Sunroof switch removal steps

2. Sunroof switch cover
3. Sunroof switch

Drain hose removal steps

- Headlining
- Rear mudguard (Rear drain hose)
- instrument panel assembly (Refer to GROUP 52A.)

◀A▶ ▶A◀ 4. Drain hose (Front side)
- Pillar duct (passenger's side) (Refer to GROUP 55.)
- Rear quarter duct (passenger's side) (Refer to GROUP 55.)

◀A▶ ▶A◀ 5. Drain hose (Rear side)

Sunroof motor assembly removal steps

- Headlining

◀B▶ ▶B◀ 6. Sunroof motor assembly

Sunroof assembly removal steps

- Headlining

◀A▶ ▶A◀ 4. Drain hose (Front side)
- Pillar duct (passenger's side) (Refer to GROUP 55.)
- Rear quarter duct (passenger's side) (Refer to GROUP 55.)

◀A▶ ▶A◀ 5. Drain hose (Rear side)

7. Set bracket
8. Sunroof assembly

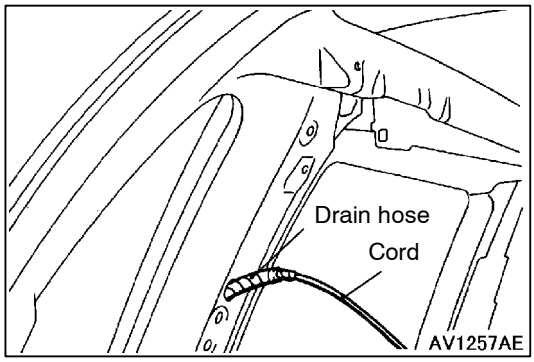

REMOVAL SERVICE POINTS

◀A▶ DRAIN HOSE REMOVAL

Tie a cord to the end of the drain hose, and wind tape around it so that there is no unevenness. Then pull the drain hose out from the passenger compartment.

◀B▶ SUNROOF MOTOR ASSEMBLY REMOVAL

Caution

Always close the roof lid glass fully before removing the sunroof motor. If the fully-closed positions of the roof lid glass and the sunroof motor are not the same, the sunroof will not operate properly.

NOTE

If there is a problem with the sunroof motor so that the roof lid glass cannot close fully, use an Allen key to turn the gear section of the sunroof motor to fully close the roof lid glass.

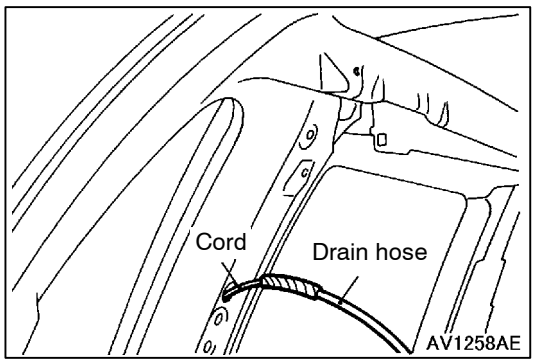

INSTALLATION SERVICE POINTS

▶A◀ DRAIN HOSE INSTALLATION

1. Tie the cord that was used during removal to the end of the drain hose, and wind tape around it so that there is no unevenness.
2. Pull the cord to pull through the drain hose

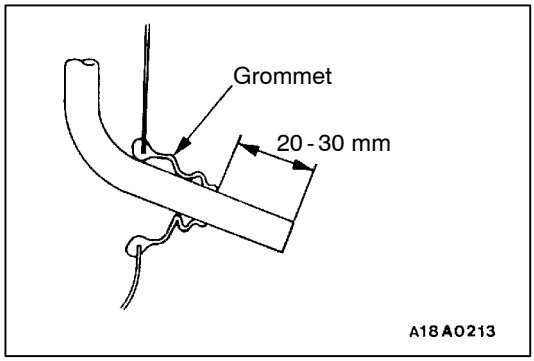

3. Install the grommet, and then position the drain hose so that it protrudes from the grommet as shown in the illustration.

▶B◀ SUNROOF MOTOR ASSEMBLY INSTALLATION

<INSTALLATION OF REMOVED MOTOR ASSEMBLY>

1. Install the roof lid glass assembly and the sunroof motor assembly with the sunroof motor assembly in the fully-closed position.
2. Connect the sunroof motor assembly harness connector and the sunroof switch harness connector to the vehicle wiring harness connector.
3. Operate the sunroof and check that it operates correctly.

<ACCESSORY (NEW) SUNROOF MOTOR ASSEMBLY INSTALLATION>

1. Install the roof lid glass assembly and the sunroof motor assembly with the sunroof motor assembly in the fully-closed position.
2. Connect the sunroof motor assembly harness connector and the sunroof switch harness connector to the vehicle wiring harness connector.
3. Operate the sunroof switch to slide the roof lid glass to the fully-open position, and then tilt it up in steps of 30 mm to the fully-open position and then keep pressing the switch for 3 seconds or more.
4. Operate the sunroof switch (CLOSE) using the one-touch function to slide the roof lid glass to the fully-closed position.
5. Operate the sunroof switch (OPEN) using the one-touch function to slide the roof lid glass to the fully-open position.
6. Operate the sunroof switch (CLOSE) using the one-touch function to slide the roof lid glass to the fully-closed position.
7. Press the tilt-up switch to operate the sunroof and check that learning is complete.
   NOTE
   (1) During initialisation (learning mode), use only the CLOSE/DOWN switch to move the roof lid glass from the fully-closed position to the fully tilted open position. During initialisation, the TILT UP switch will not work when pressed. Furthermore, the sunroof-ECU will stop running in learning mode as soon as the roof lid glass is tilted up.
   (2) When the clamping prevention mechanism is cancelled, the operation is the same as when the roof lid glass operates 30 mm at a time.

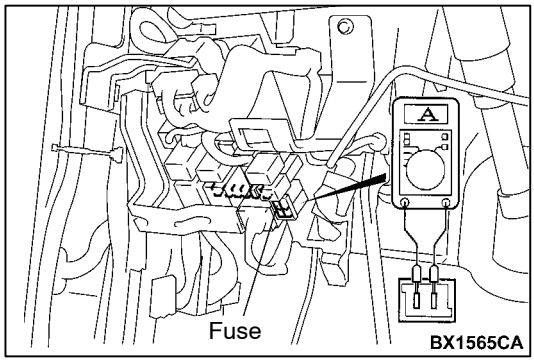

INSPECTION

ROOF LID GLASS OPERATION CURRENT CHECK

1. Remove the sunroof fuse and connect a circuit analyser as shown in the illustration.
2. Press the sunroof switch to operate the sunroof, and then measure the operation current while the roof lid glass is moving (except when the sunroof starts to operate, when it is fully open, when it is fully closed and when it is fully tilted up).

   Standard value: 7 A or less (at 20°C)
3. If the operation current is not within the standard value, check the following points.
   - Installation condition, warping or jamming of sunroof assembly
   - Sticking of drive cable
   - Tilt of roof lid glass

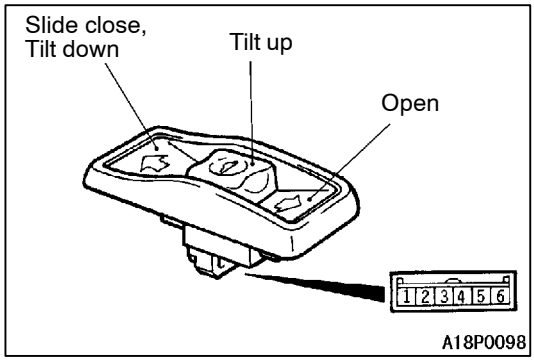

SUNROOF SWITCH CONTINUITY CHECK

Switch position	Terminal No.			
	3	4	5	6
Open		○	○	
Off				
Tilt up	○	○		
Slide close, Tilt down		○		○

DISASSEMBLY AND REASSEMBLY

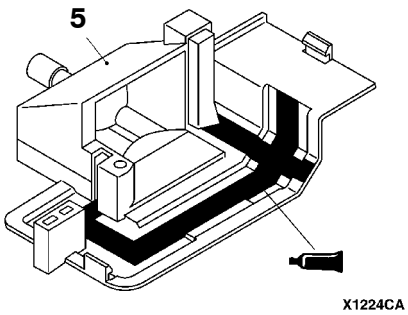

Sealant:
3M ATD Part No. 8531 or 8646 Auto Sealant or equivalent

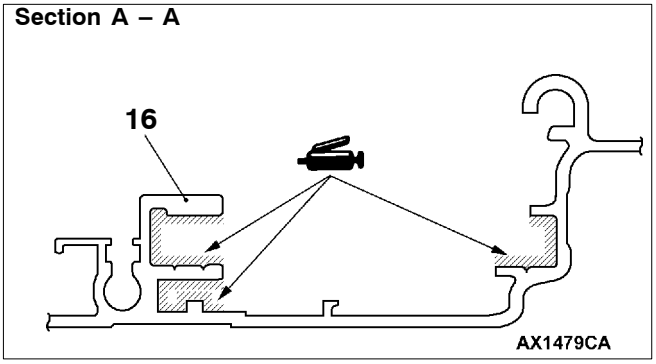

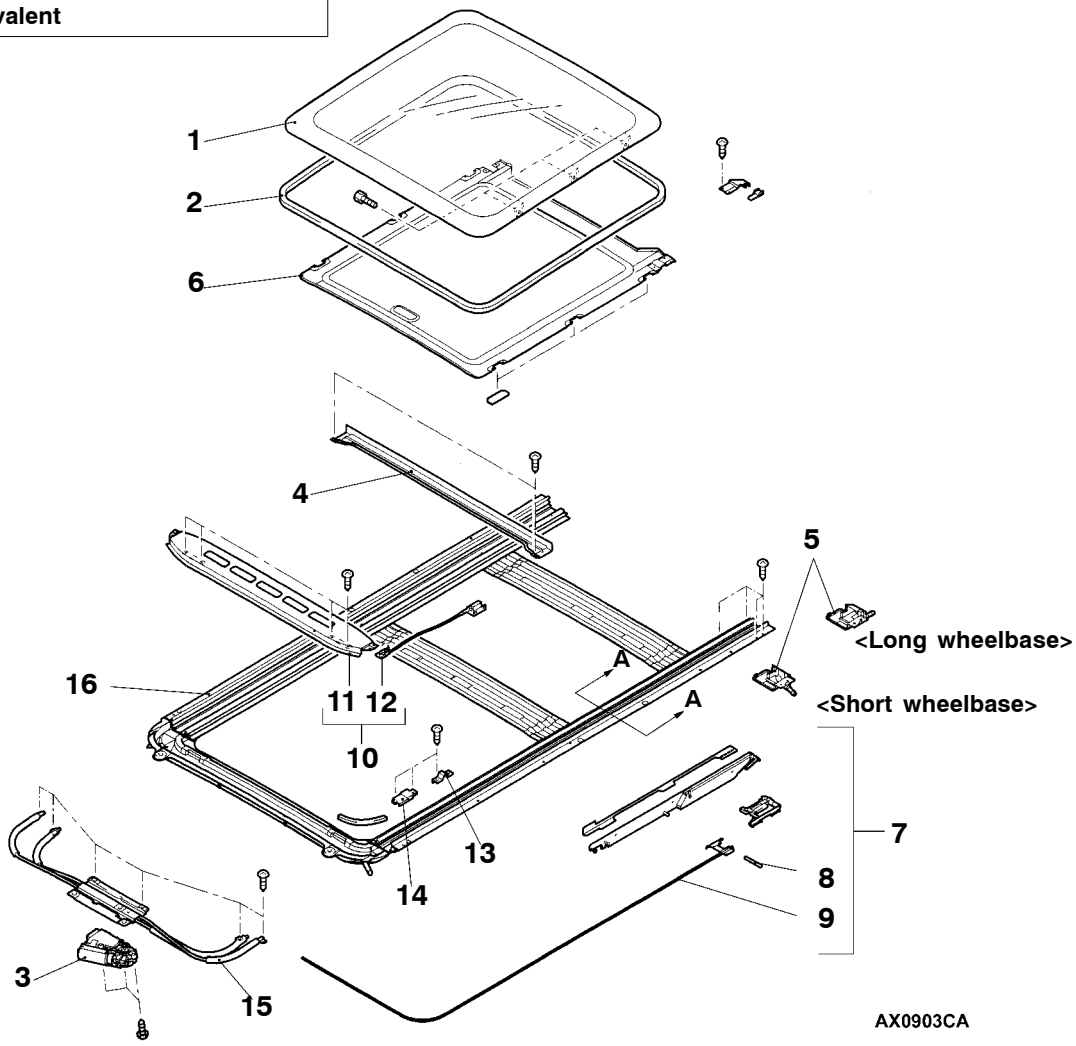

Disassembly steps

1. Roof lid glass assembly
2. Weatherstrip
3. Sunroof motor
4. Roof drip channel
5. Rear drip assembly
6. Sun shade assembly
7. Drive cable assembly
8. ◀A▶ ▶A◀ Shaft
9. ◀A▶ Drive cable
10. ◀B▶ Roof window deflector panel assembly
11. ◀C▶ Deflector
12. ◀C▶ Deflector link
13. Set plate
14. Front cover
15. Cable guide casing
16. Guide rail sub-assembly

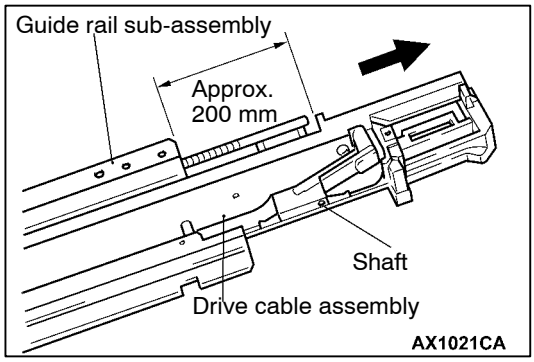

DISASSEMBLY SERVICE POINTS

◀A▶ SHAFT/DRIVE CABLE REMOVAL

After pulling out the drive cable assembly as shown in the illustration, remove the shaft and the drive cable.

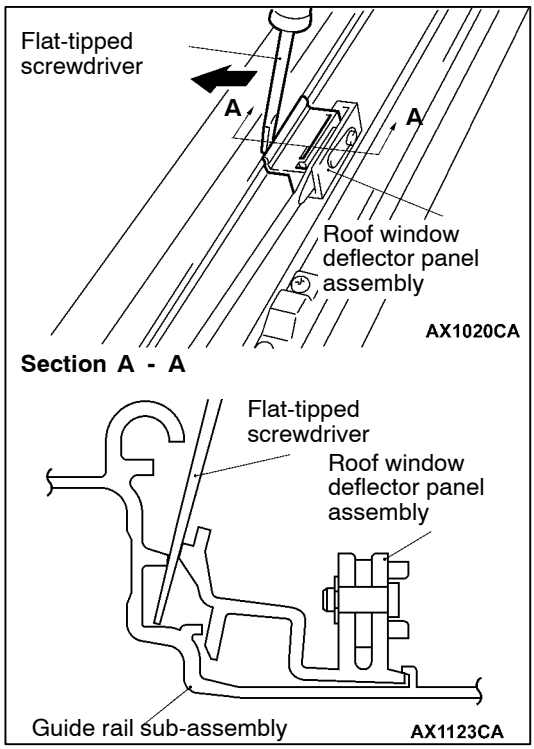

◀B▶ ROOF WINDOW DEFLECTOR PANEL ASSEMBLY REMOVAL

Twist a flat-tipped screwdriver or similar tool as shown in the illustration to remove the roof window deflector panel assembly.

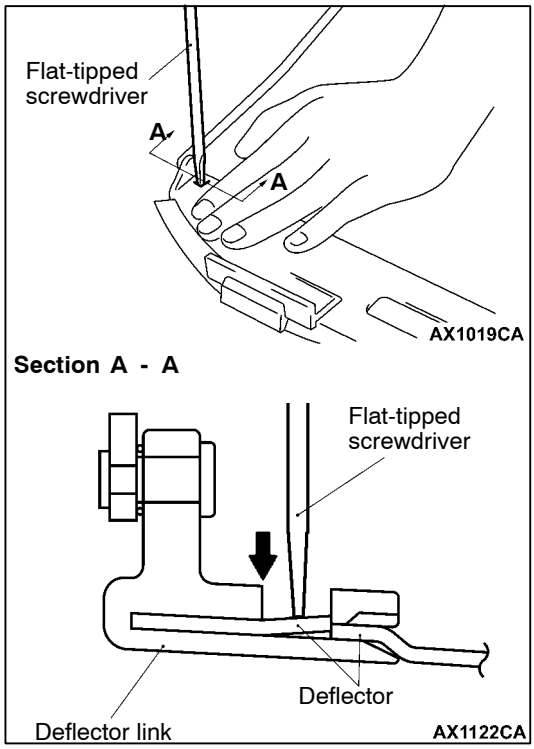

◀C▶ DEFLECTOR/DEFLECTOR LINK REMOVAL

Use a flat-tipped screwdriver or similar tool to separate the deflector and the deflector panel as shown in the illustration.

REASSEMBLY SERVICE POINT

▶A◀ SHAFT INSTALLATION
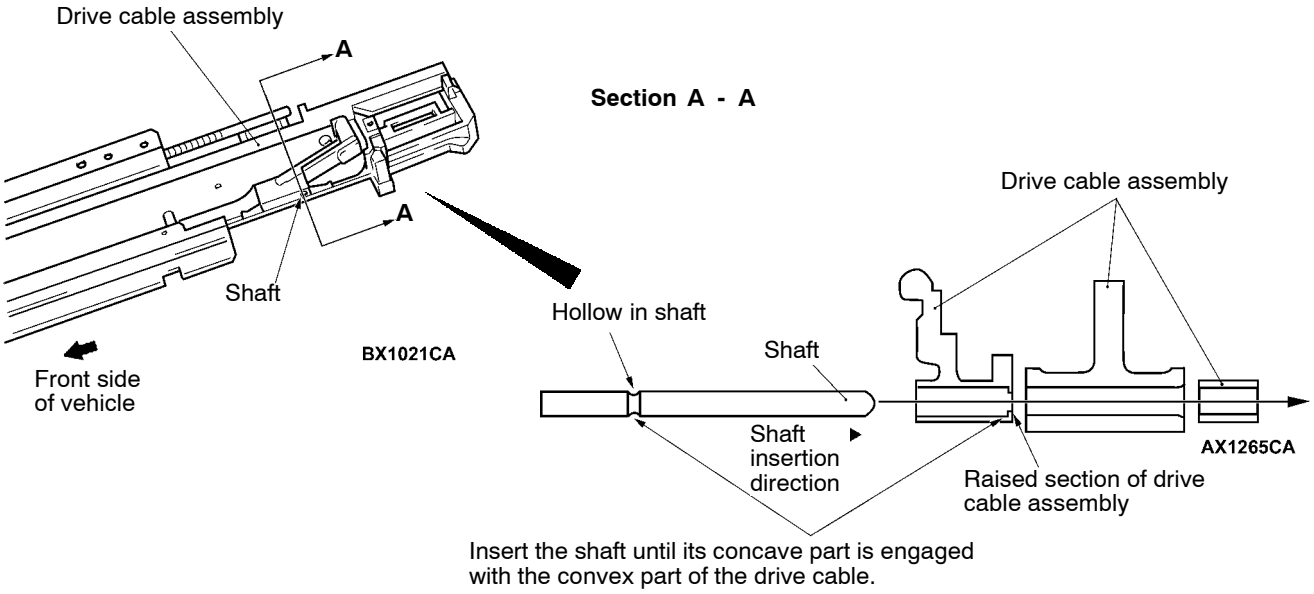
Working outside the vehicle, install the shaft to the drive cable according to the procedure below.